ARTICLE 32
ZONING

(As Enacted & Corrected, Effective June 5, 2017, by Ords. 16-581 & 17-015
and
As Last Amended by Ord. 17-056)

Published by
BALTIMORE CITY DEPARTMENT OF LEGISLATIVE REFERENCE
Avery Aisenstark, Director
2017

Copyright © 2017
The Mayor and City Council of Baltimore
Department of Legislative Reference
All rights reserved

For information – call, write, or fax:

Department of Legislative Reference
626 City Hall
Baltimore, Maryland 21202
Tel: (410) 396-4730 ☎ Fax: (410) 396-8483

08/28/17

LIST OF TITLES AND SUBTITLES

Title 1. General Provisions

Subtitle 1. Purpose of Title
Subtitle 2. Rules of Interpretation
Subtitle 3. Definitions

Title 2. Purpose; Applicability; Short Title

Subtitle 1. Purpose of Code
Subtitle 2. Applicability
Subtitle 3. Short Title

Title 3. Outline of Code Administration
Subtitle 1. Purpose of Title
Subtitle 2. Administrative Agencies and Officials

Title 4. Development Reviews
Subtitle 1. Purpose of Title
Subtitle 2. Site Plan Review
Subtitle 3. Environmentally Sensitive Areas Review
Subtitle 4. Design Review
Subtitle 5. Landscape Review

Title 5. Applications and Authorizations
Subtitle 1. Purpose of Title
Subtitle 2. Applications
Subtitle 3. Variances
Subtitle 4. Conditional Uses
Subtitle 5. Legislative Authorizations
Subtitle 6. Notices
Subtitle 7. Use Permits
Subtitle 8. Zoning Consultations
Subtitle 9. Zoning Verifications

Title 6. Zoning Districts; Maps and Profiles
Subtitle 1. Purpose of Title
Subtitle 2. Zoning Districts
Subtitle 3. Maps and Profiles

Title 7. Open-Space and Environmental Districts
Subtitle 1. Purpose of Title
Subtitle 2. Open-Space Zoning Districts
Subtitle 3. Floodplain Overlay Zoning District
Subtitle 4. Chesapeake Bay Critical Area Overlay Zoning District

Title 8. Detached and Semi-Detached Residential Districts
Subtitle 1. Purpose of Title
Subtitle 2. District Descriptions
Subtitle 3. Use Regulations
Subtitle 4. Bulk and Yard Regulations
Subtitle 5. {Reserved}
Subtitle 6. Other Applicable Standards

Title 9. Rowhouse and Multi-Family Residential Districts
Subtitle 1. Purpose of Title
Subtitle 2. District Descriptions
Subtitle 3. Use Regulations
Subtitle 4. Bulk and Yard Regulations
Subtitles 5 and 6. {Reserved}
Subtitle 7. Residential Conversions
Subtitle 8. Other Applicable Standards

Title 10. Commercial Districts
Subtitle 1. Purpose of Title
Subtitle 2. District Descriptions
Subtitle 3. Use Regulations
Subtitle 4. Bulk and Yard Regulations
Subtitle 5. Design Standards for C-5 District
Subtitle 6. Other Applicable Standards

Title 11. Industrial Districts
Subtitle 1. Purpose of Title
Subtitle 2. District Descriptions
Subtitle 3. Use Regulations
Subtitle 4. Bulk and Yard Regulations
Subtitle 5. {Reserved}
Subtitle 6. Other Applicable Standards

Title 12. Special Purpose Districts
Subtitle 1. Purpose of Title
Subtitle 2. District Descriptions
Subtitle 3. Office-Residential Districts
Subtitle 4. Transit-Oriented Development Districts
Subtitle 5. Educational Campus Districts
Subtitle 6. Hospital Campus Districts
Subtitle 7. Transportation Districts
Subtitle 8. {Reserved}
Subtitle 9. Waterfront Overlay Districts
Subtitle 10. Rowhouse Mixed-Use Overlay Districts
Subtitle 11. Detached Dwelling Mixed-Use Overlay Districts
Subtitle 12. Adult Use Overlay District
Subtitle 13. Port Covington District

Title 13. Planned Unit Developments
Subtitle 1. Purpose; Transition Rules
Subtitle 2. Requirements; Approval Standards; Exceptions
Subtitle 3. Procedures for Plan Approval
Subtitle 4. Modifications to Approved Final Development Plan
Subtitle 5. Enforcement

Title 14. Use Standards
Subtitle 1. Purpose of Title
Subtitle 2. Applicability of Use Standards
Subtitle 3. Use Standards
Subtitle 4. Temporary-Use Standards

Title 15. Site Development Standards
Subtitle 1. Purpose of Title
Subtitle 2. Applicability of Development Standards
Subtitle 3. Measurement Methodologies
Subtitle 4. Exceptions
Subtitle 5. Accessory Structures and Uses
Subtitle 6. Permitted Encroachments
Subtitle 7. Performance Standards

Title 16. Off-Street Parking and Loading
Subtitle 1. Purpose of Title
Subtitle 2. General Applicability
Subtitle 3. Construction of Facilities
Subtitle 4. Design of Facilities
Subtitle 5. Permitted Parking Alternatives
Subtitle 6. Required Off-Street Parking
Subtitle 7. Required Bicycle Parking
Subtitle 8. Additional Vehicle Storage Requirements
Subtitle 9. Off-Street Loading Requirements

Title 17. Signs
Subtitle 1. Purpose of Title; Definitions
Subtitle 2. Placement, Design, and Construction
Subtitle 3. Sign Dimension Measurement Methodology
Subtitle 4. Sign Permit and Special Designations
Subtitle 5. Exempt Signs
Subtitle 6. Prohibited Signs
Subtitle 7. Temporary Signs
Subtitle 8. Permanent Signs
Subtitle 9. Areas of Special Sign Control
Subtitle 10. Nonconforming Signs

Title 18. Nonconformities
Subtitle 1. Purpose of Title
Subtitle 2. Definitions; General Provisions
Subtitle 3. Nonconforming Uses
Subtitle 4. Nonconforming Structures
Subtitle 5. Nonconforming Signs
Subtitle 6. Nonconforming Lots
Subtitle 7. Mandatory Termination of Certain Uses

Title 19. Prohibited Conduct; Enforcement Administrative and Judicial Review
Subtitle 1. Prohibited Conduct
Subtitle 2. Enforcement
Subtitle 3. Administrative and Judicial Review

{PAGE LEFT INTENTIONALLY BLANK}

LIST OF SECTIONS

TITLE 1
GENERAL PROVISIONS

Subtitle 1
Purpose of Title

§ 1-101. In general.

Subtitle 2
Rules of Interpretation

§ 1-201. In general.
§ 1-202. Captions or headings.
§ 1-203. Code not a permit.
§ 1-204. Conflicting provisions.
§ 1-205. Gender.
§ 1-206. "Includes" or "including".
§ 1-207. Mandatory, prohibitory, and permissive terms.
§ 1-208. Number.
§ 1-209. References to "this Code".
§ 1-210. References to other laws.
§ 1-211. Severability.
§ 1-212. Tables.
§ 1-213. Time computations.
§ 1-214. Undefined terms.
§ 1-215. "Used" or "occupied".
§ 1-216. *{Reserved}*
§ 1-217. Uses, generic and specific.
§ 1-218. Uses prohibited citywide.
§ 1-219. Use and Site Development Standards.

Subtitle 3
Definitions

§ 1-301. In general.
§ 1-302. "Abut" to "Awning".
§ 1-303. "Bail bond establishment" to "Child day-care home".
§ 1-304. "Chimney" to "Day-care center: Child".
§ 1-305. "Day-care home: Adult" to "Electric substation: Outdoor".
§ 1-306. "Encroachment" to "Golf course".
§ 1-307. "Government facility" to "Industrial boat repair".
§ 1-308. "Industrial: General" to "Lot: Interior".
§ 1-309. "Lot line" to "Motel".
§ 1-310. "Motor vehicle" to "Owner".
§ 1-311. "Parapet" to "Processed metal".
§ 1-312. "Property line" to "Roof deck".
§ 1-313. "Roofline" to "Substantial construction".
§ 1-314. "Tavern" to "Wholesale Goods".
§ 1-315. "Yard" to "Zoo".

TITLE 2
PURPOSE; APPLICABILITY; SHORT TITLE

Subtitle 1
Purpose of Code

§ 2-101. Purpose of Code.

Subtitle 2
Applicability

§ 2-201. Application of Code.
§ 2-202. Exempt utility and governmental uses.
§ 2-203. Transition rules.

Subtitle 3
Short Title

§ 2-301. Short Title.

TITLE 3
OUTLINE OF CODE ADMINISTRATION

Subtitle 1
Purpose of Title

§ 3-101. Purpose.

Subtitle 2
Administrative Agencies and Officials

§ 3-201. Zoning Administrator.
§ 3-202. Board of Municipal and Zoning Appeals.
§ 3-203. Planning Commission.
§ 3-204. Director of Planning.
§ 3-205. Commissioner of Housing and Community Dev't.

TITLE 4
DEVELOPMENT REVIEWS

Subtitle 1
Purpose of Title

§ 4-101. Purpose.

Subtitle 2
Site Plan Review

§ 4-201. Purpose.
§ 4-202. Site Plan Review Manual.
§ 4-203. Applicability.
§ 4-204. Approval prerequisite to permit.
§ 4-205. Submittal requirements.
§ 4-206. Procedures.
§ 4-207. Review standards.
§ 4-208. Administrative appeals.

Subtitle 3
Environmentally Sensitive Areas Review

§ 4-301. Purpose.
§ 4-302. Applicability.
§ 4-303. Approval prerequisite to permit.
§ 4-304. Submittal requirements.
§ 4-305. Review standards.
§ 4-306. Administrative appeals.

Subtitle 4
Design Review

§ 4-401. Purpose.
§ 4-402. Design Manual.
§ 4-403. Goals.
§ 4-404. Objectives.
§ 4-405. Applicability.
§ 4-406. Approval prerequisite to permit.
§ 4-407. Submittal requirements.
§ 4-408. Procedures.
§ 4-409. Administrative exceptions.
§ 4-410. Administrative appeals.

Subtitle 5
Landscape Review

§ 4-501. Purpose.
§ 4-502. Landscape Manual.
§ 4-503. Goals.
§ 4-504. Objectives - Environmental.
§ 4-505. Objectives - Character and sense of place.
§ 4-506. Objectives - Economic.
§ 4-507. Objectives - Landscape installation, maintenance.
§ 4-508. Review process.
§ 4-509. Applicability.
§ 4-510. Approval prerequisite to permit.
§ 4-511. Submittal requirements.
§ 4-512. Procedures.
§ 4-513. Review standards.
§ 4-514. Administrative appeals.

TITLE 5
APPLICATIONS AND AUTHORIZATIONS

Subtitle 1
Purpose of Title

§ 5-101. Purpose.

Subtitle 2
Applications

§ 5-201. Introduction of proposed authorization.
§ 5-202. Completeness review.
§ 5-203. Required fees.
§ 5-204. Withdrawal of application.
§ 5-205. Reapplication waiting period.

Subtitle 3
Variances

§ 5-301. Purpose.
§ 5-302. Minor and major variances distinguished.
§ 5-303. Review of applications.
§ 5-304. Minor variances.
§ 5-305. Major variances.
§ 5-306. Qualifications.
§ 5-307. Variance less than requested.
§ 5-308. Approval standards.
§ 5-309. Expiration of approval.

Subtitle 4
Conditional Uses

§ 5-401. Purpose.
§ 5-402. *{Reserved}*
§ 5-403. Referrals.
§ 5-404. Actions taken.
§ 5-405. Conditions.
§ 5-406. Approval standards.
§ 5-407. Expiration of approval.
§ 5-408. Discontinued conditional use.
§ 5-409. Revocations, etc., of conditional use.

Subtitle 5
Legislative Authorizations

§ 5-501. "Legislative authorization" defined.
§ 5-502. Scope of subtitle.
§ 5-503. *{Reserved}*
§ 5-504. Referrals.
§ 5-505. *{Reserved}*
§ 5-506. Procedures on referral.
§ 5-507. Action by City Council.
§ 5-508. Approval standards.

Subtitle 6
Notices

§ 5-601. Map or text amendments; PUDs.
§ 5-602. Major variances; Conditional uses.
§ 5-603. Minor variances.
§ 5-604. Planning Comm'n consideration of site-specific projects.
§ 5-605. *{Reserved}*
§ 5-606. Responsibility for notices.
§ 5-607. Electronic notice.

Subtitle 7
Use Permits

§ 5-701. Purpose.
§ 5-702. Nature of permit.
§ 5-703. Authorization and issuance.
§ 5-704. When required.
§ 5-705. Procedure.

Subtitle 8
Zoning Consultations

§ 5-801. Purpose.
§ 5-802. Who may request.
§ 5-803. Procedure.
§ 5-804. Non-binding status of consultations.

Subtitle 9
Zoning Verifications

§ 5-901. Purpose.
§ 5-902. Procedure.
§ 5-903. City immune from liability.

TITLE 6
ZONING DISTRICTS; MAPS AND PROFILES

Subtitle 1
Purpose of Title

§ 6-101. Purpose.

Subtitle 2
Zoning Districts

§ 6-201. Establishment of districts.
§ 6-202. Open-Space and Environmental Districts.
§ 6-203. Detached and Semi-Detached Residential Districts.
§ 6-204. Rowhouse and Multi-Family Residential Districts.
§ 6-205. Commercial Districts.
§ 6-206. Industrial Districts.
§ 6-207. Special Purpose Districts.

Subtitle 3
Maps and Profiles

§ 6-301. Maps and profiles part of Code.
§ 6-302. Letter or letter-number designations.
§ 6-303. Boundary line determination.
§ 6-304. Property divided by zoning district line.

TITLE 7
OPEN-SPACE AND ENVIRONMENTAL DISTRICTS

Subtitle 1
Purpose of Title

§ 7-101. Purpose.

Subtitle 2
Open-Space Zoning Districts

§ 7-201. Purpose of Open-Space Districts.
§ 7-202. Use regulations.
§ 7-203. Bulk and yard regulations.
§ 7-204. Other applicable standards.

Subtitle 3
Floodplain Overlay Zoning District

§ 7-301. Definitions.
§ 7-302. Purpose of Floodplain Overlay District.
§ 7-303. Overlay subdistricts.
§ 7-304. Use regulations.
§ 7-305. Bulk and yard regulations.
§ 7-306. Variances and conditional uses.
§ 7-307. *{Reserved}*
§ 7-308. Municipal and personal liability.
§ 7-309. Other applicable laws.

Subtitle 4
Chesapeake Bay Critical Area Overlay Zoning District

§ 7-401. Purpose of Critical Area Overlay District.
§ 7-402. Definitions.
§ 7-403. Designation of Critical Area.
§ 7-404. Development areas.
§ 7-405. Maps.
§ 7-406. Prohibited uses.
§ 7-407. Resource Conservation Area.
§ 7-408. Intensely Developed Areas – Waterfront Revitalization.
§ 7-409. Intensely Developed Areas – Waterfront Industrial.
§ 7-410. Intensely Developed Areas – Water-dependent facilities within Buffer.
§ 7-411. Public utility and government services.
§ 7-412. Abandoned uses.
§ 7-413. Bulk and yard regulations.
§ 7-414. Variances and conditional uses.
§ 7-415. Civil penalties.

TITLE 8
DETACHED AND SEMI-DETACHED RESIDENTIAL DISTRICTS

Subtitle 1
Purpose of Title

§ 8-101. Purpose.

Subtitle 2
District Descriptions

§ 8-201. Common standards.
§ 8-202. R-1A Detached Residential District.
§ 8-203. R-1B Detached Residential District.
§ 8-204. R-1C Detached Residential District.
§ 8-205. R-1D Detached Residential District.
§ 8-206. R-1E Detached Residential District.
§ 8-207. R-1 Detached Residential District.
§ 8-208. R-2 Detached and Semi-Detached Residential District.
§ 8-209. R-3 Detached Residential District.
§ 8-210. R-4 Detached and Semi-Detached Residential District.

Subtitle 3
Use Regulations

§ 8-301. As listed in Table 8-301.

Subtitle 4
Bulk and Yard Regulations

§ 8-401. In general.
§ 8-402. Measurement methodologies; Exceptions, etc.

Subtitle 5
{Reserved}

Subtitle 6
Other Applicable Standards

§ 8-601. In general.
§ 8-602. Accessory structures and uses.
§ 8-603. Site development.
§ 8-604. Off-street parking and loading.
§ 8-605. Design standards.
§ 8-606. Landscaping and screening.
§ 8-607. Signs.
§ 8-608. Temporary uses.

TITLE 9
ROWHOUSE AND MULTI-FAMILY RESIDENTIAL DISTRICTS

Subtitle 1
Purpose of Title

§ 9-101. Purpose.

Subtitle 2
District Descriptions

§ 9-201. R-5 Transitional Residential District.
§ 9-202. R-6 Garden Rowhouse Residential District.
§ 9-203. R-7 Mixed Residential District.
§ 9-204. R-8 Rowhouse Residential District.
§ 9-205. R-9 Multi-Family Residential District.
§ 9-206. R-10 High-Density Residential District.

Subtitle 3
Use Regulations

§ 9-301. As listed in Table 9-301.

Subtitle 4
Bulk and Yard Regulations

§ 9-401. In general.
§ 9-402. Measurement methodologies; Exceptions, etc.
§ 9-403. Setback reduction for courtyard design.

Subtitles 5 and 6
{Reserved}

Subtitle 7
Residential Conversions

§ 9-701. Where allowed.
§ 9-702. Design review.
§ 9-703. Conversion standards.

Subtitle 8
Other Applicable Standards

§ 9-801. In general.
§ 9-802. Accessory structures and uses.
§ 9-803. Site development.
§ 9-804. Off-street parking and loading.
§ 9-805. Design standards.
§ 9-806. Landscaping and screening.
§ 9-807. Signs.
§ 9-808. Temporary uses.

TITLE 10
COMMERCIAL DISTRICTS

Subtitle 1
Purpose of Title

§ 10-101. Purpose.

Subtitle 2
District Descriptions

§ 10-201. C-1 Neighborhood Business District.
§ 10-202. C-1-E Neighborhood Business and Entertainment District.
§ 10-203. C-1-VC Neighborhood Business District (Village Center).
§ 10-204. C-2 Community Commercial District.
§ 10-205. C-3 General Commercial District.
§ 10-206. C-4 Heavy Commercial District.
§ 10-207. C-5 Downtown District.

Subtitle 3
Use Regulations

§10-301. As listed in Table10-301.

Subtitle 4
Bulk and Yard Regulations

§ 10-401. In general.
§ 10-402. Measurement methodologies; Exceptions, etc.

Subtitle 5
Design Standards for C-5 District

§ 10-501. Harbor promenade.
§ 10-502. Open-space plazas.
§ 10-503. Parking and access.
§ 10-504. View protection.

Subtitle 6
Other Applicable Standards

§ 10-601. In general.
§ 10-602. Accessory structures and uses.
§ 10-603. Site development.
§ 10-604. Off-street parking and loading.
§ 10-605. Design standards.
§ 10-606. Landscaping and screening.
§ 10-607. Signs.
§ 10-608. Temporary uses.
§ 10-609. Residential conversions.

TITLE 11
INDUSTRIAL DISTRICTS

Subtitle 1
Purpose of Title

§ 11-101. Purpose.

Subtitle 2
District Descriptions

§ 11-201. OIC Office-Industrial Campus District.
§ 11-202. BSC Bio-Science Campus District.
§ 11-203. I-MU Industrial Mixed-Use District.
§ 11-204. I-1 Light Industrial District.
§ 11-205. I-2 General Industrial District.
§ 11-206. MI Maritime Industrial District.

Subtitle 3
Use Regulations

§11-301. As listed in Table11-301.

Subtitle 4
Bulk and Yard Regulations

§ 11-401. In general.
§ 11-402. Measurement methodologies; Exceptions, etc.

Subtitle 5
{Reserved}

Subtitle 6
Other Applicable Standards

§ 11-601. In general.
§ 11-602. Accessory structures and uses.
§ 11-603. Site development.
§ 11-604. Off-street parking and loading.
§ 11-605. Design standards.
§ 11-606. Landscaping and screening.
§ 11-607. Signs.
§ 11-608. Temporary uses.

TITLE 12
SPECIAL USE DISTRICTS

Subtitle 1
Purpose of Title

§ 12-101. In general.
§ 12-102. Purpose of Overlay Districts.

Subtitle 2
District Descriptions

§ 12-201. OR Office-Residential Districts.
§ 12-202. TOD Transit-Oriented Development Districts.
§ 12-203. EC Educational Campus Districts.
§ 12-204. H Hospital Campus Districts.
§ 12-205. T Transportation Districts.
§ 12-206. *{Reserved}*
§ 12-207. W Waterfront Overlay Districts.
§ 12-208. R-MU Rowhouse Mixed-Use Overlay Districts.
§ 12-209. D-MU Detached Dwelling Mixed-Use Overlay Districts.
§ 12-210. AU Adult Use Overlay Districts.
§ 12-211. PC Port Covington Zoning District.

Subtitle 3
Office-Residential Districts

§ 12-301. Use regulations.
§ 12-302. Bulk and yard regulations.
§ 12-303. Other applicable standards.

Subtitle 4
Transit-Oriented Development Districts

§ 12-401. Establishment of TOD Districts.
§ 12-402. Use regulations.
§ 12-403. Bulk and yard regulations.
§ 12-404. *{Reserved}*
§ 12-405. Parking requirements.
§ 12-406. Other applicable standards.

Subtitle 5
Educational Campus Districts

§ 12-501. Use regulations.
§ 12-502. Bulk and yard regulations.
§ 12-503. Educational Campus Master Plan.
§ 12-504. Other applicable standards.
§ 12-505. Minimum size of district.

Subtitle 6
Hospital Campus Districts

§ 12-601. Use regulations.
§ 12-602. Bulk and yard regulations.
§ 12-603. Hospital General Development Plan.
§ 12-604. Other applicable standards.
§ 12-605. Minimum size of district.

Subtitle 7
Transportation Districts

§ 12-701. Use regulations.

Subtitle 8
{Reserved}

Subtitle 9
Waterfront Overlay Districts

§ 12-901. Applicability.
§ 12-902. Design review required.
§ 12-903. Maximum building heights.
§ 12-904. Protection of public right-of-way view corridors.
§ 12-905. Building requirements.
§ 12-906. Waterfront public access promenade, open space, and required easements.

Subtitle 10
Rowhouse Mixed-Use Overlay Districts

§ 12-1001. Applicability.
§ 12-1002. Minimum size of district.
§ 12-1003. Use regulations.
§ 12-1004. Bulk and yard regulations.
§ 12-1005. Design and performance standards.

Subtitle 11
Detached Dwelling Mixed-Use Overlay Districts

§ 12-1101. Applicability.
§ 12-1102. Minimum size of district.
§ 12-1103. Use regulations.
§ 12-1104. Bulk and yard regulations.
§ 12-1105. Design and performance standards.

Subtitle 12
Adult Use Overlay District

§ 12-1201. Applicability.
§ 12-1202. Use regulations.
§ 12-1203. Bulk and yard regulations.
§ 12-1204. Establishment of adult use.

Subtitle 13
Port Covington District

§ 12-1301. Subdistricts.
§ 12-1302. Use regulations.
§ 12-1303. Bulk and yard regulations.
§ 12-1304. Other applicable standards.

TITLE 13
PLANNED UNIT DEVELOPMENT

Subtitle 1
Purpose; Transition Rules

§ 13-101. Purpose.
§ 13-102. Transition Rules.

Subtitle 2
Requirements; Approval Standards; Exceptions

§ 13-201. Authorization.
§ 13-202. General requirements.
§ 13-203. Approval standards.
§ 13-204. Exceptions from district regulations.

Subtitle 3
Procedures for Plan Approval

§ 13-301. In general.
§ 13-302. Preliminary consultation.
§ 13-303. Concept plan.
§ 13-304. PUD master plan.
§ 13-305. Final development plan.

Subtitle 4
Modifications to Approved Final Development Plans

§ 13-401. Engineering corrections.
§ 13-402. Minor changes.
§ 13-403. Major changes.

Subtitle 5
Enforcement

§ 13-501. Ordinance and development plan as binding agreement.
§ 13-502. Expiration on failure to proceed timely.
§ 13-503. Noncompliance.

TITLE 14
USE STANDARDS

Subtitle 1
Purpose of Title

§ 14-101. Purpose.

Subtitle 2
Applicability of Use Standards

§ 14-201. Use of land and structures
§ 14-202. Additional standards.

Subtitle 3
Use Standards

§ 14-301. Adult uses.
§ 14-301.1. After-hours establishments.
§ 14-302. Banquet halls.
§ 14-303. Boat manufacturing, repair, and sales.
§ 14-304. Car washes.
§ 14-305. Commercial composting facilities.
§ 14-306. Community-based alternative energy systems.
§ 14-307. Community-managed open-space gardens and farms.
§ 14-308. Cultural facilities.
§ 14-309. Day-care centers: Adult or child.
§ 14-310. Day-care homes: Adult or child.
§ 14-311. Drive-through facilities.
§ 14-312. Entertainment and recreation facilities: Indoor or outdoor.
§ 14-313. Fraternity or sorority houses.
§ 14-314. Gas stations.
§ 14-315. General industrial (in MI District).
§ 14-316. Junk or scrap storage and yards.
§ 14-317. Kennels and animal clinics.
§ 14-318. Landfill: Industrial.
§ 14-319. Live entertainment or dancing.
§ 14-320. Lodges and social clubs.
§ 14-321. Lounges.
§ 14-322. *{Reserved}*
§ 14-323. Marinas; Industrial boat repair facilities.
§ 14-324. Materials recovery facilities.
§ 14-325. Motor vehicle or recreational vehicle dealerships or rental establishments.
§ 14-326. Motor vehicle service and repair: Major or minor.
§ 14-327. Multi-family dwellings – Accessory non-residential uses.
§ 14-328. Neighborhood commercial establishments.
§ 14-329. Outdoor dining.
§ 14-330. Outdoor storage yards and contractor storage yards.
§ 14-331. Parking garages (principal use) and parking lots.
§ 14-332. Places of worship.
§ 14-333. Recyclable materials recovery facilities.
§ 14-334. Residential-care facilities.
§ 14-335. Resource recovery facilities.
§ 14-335.1. Retail: Big box establishments.
§ 14-336. Retail goods establishments – With alcoholic beverage sales.
§ 14-337. Taverns.
§ 14-338. Telecommunications facilities.
§ 14-339. Urban agriculture.
§ 14-340. Utilities and electric substations.

Subtitle 4
Temporary-Use Standards

§ 14-401. Permits.
§ 14-402. General provisions.
§§ 14-403 to 14-405. *{Reserved}*
§ 14-406. Permitted temporary uses – Carnivals or circuses.
§ 14-407. Permitted temporary uses – Seasonal or holiday sales lots.
§ 14-408. Permitted temporary uses – Farmers' markets.
§ 14-409. Permitted temporary uses – House, apartment, garage, and yard sales.
§ 14-410. Permitted temporary uses – Shows and sales.
§ 14-411. Permitted temporary uses – Sidewalk sales.
§ 14-412. Permitted temporary uses – Outdoor entertainment.
§ 14-413. Permitted temporary uses – Batching plants.
§ 14-414. Permitted temporary uses – Contractor trailers; Real estate model units.
§ 14-415. Permitted temporary uses – Self-storage containers.
§ 14-416. Permitted temporary uses – Tents.

TITLE 15
SITE DEVELOPMENT STANDARDS

Subtitle 1
Purpose of Title

§ 15-101. Purpose.

Subtitle 2
Applicability of Development Standards

§ 15-201. Compliance required.
§ 15-202. Continued conformity with yard, etc., requirements.

Subtitle 3
Measurement Methodologies

§ 15-301. Measurement of building height.
§ 15-302. Measurement of density.
§ 15-303. Measurement of floor area ratio.
§ 15-304. Measurement of lot coverage.

Subtitle 4
Exceptions

§ 15-401. Street, public transit, and open-space dedications.
§ 15-402. Inclusionary housing adjustment.
§ 15-403. Rear yard reduction.
§ 15-404. Building heights near Washington Monument.
§ 15-405. Limitations in Mount Vernon neighborhood.

Subtitle 5
Accessory Structures and Uses

§ 15-501. General regulations.
§ 15-502. Amateur (ham) radio equipment.
§ 15-503. Automobile charging station (electric and solar).
§ 15-504. Carriage house.

§ 15-505. Exterior lighting.
§ 15-506. Greenhouses and hoop-houses.
§ 15-507. Home occupation.
§ 15-508. Mechanical equipment.
§ 15-509. Outdoor sales and displays by retail goods establishments.
§ 15-510. Outdoor storage.
§ 15-511. Parking garages (residential).
§ 15-512. Porches.
§ 15-513. Public park accessory uses.
§ 15-514. Recycling collection stations.
§ 15-515. Refuse disposal containers and refuse storage areas.
§ 15-516. Satellite dish antennas.
§ 15-517. Alternative energy systems: Solar.
§ 15-518. Alternative energy systems: Wind.

Subtitle 6
Permitted Encroachments

§ 15-601. Permitted projections and obstructions into required yards.

Subtitle 7
Performance Standards

§ 15-701. Purpose.
§ 15-702. Applicability of standards.
§ 15-703. Environmental performance standards.

TITLE 16
OFF-STREET PARKING AND LOADING

Subtitle 1
Purpose of Title

§ 16-101. Purpose.

Subtitle 2
General Applicability

§ 16-201. Existing off-street parking facilities.
§ 16-202. Damage or destruction.
§ 16-203. Additions or expansions to existing structures.
§ 16-204. Change in use.
§ 16-205. Provision of additional spaces and parking maximums.
§ 16-206. Prohibited uses of off-street parking and loading spaces.
§ 16-207. Computation of off-street parking requirements.
§ 16-208. Accessible parking requirements.

Subtitle 3
Construction of Facilities

§ 16-301. Site plan review requirements.
§ 16-302. Time of completion.

Subtitle 4
Design of Facilities

§ 16-401. Location.
§ 16-402. Minimum dimensions of parking spaces.
§ 16-403. Access.
§ 16-404. Driveways.
§ 16-405. Curb cuts.
§ 16-406. Drive-through facility stacking spaces.
§ 16-407. Surfacing.
§ 16-408. Pavement markings
§ 16-409. Curbing and wheel stops.
§ 16-410. Lighting.

Subtitle 5
Permitted Parking Alternatives

§ 16-501. Collective and alternating shared parking.
§ 16-502. Land-banked future parking.
§§ 16-503 and 16-504. *{Reserved}*
§ 16-505. Cross-access easements.

Subtitle 6
Required Off-Street Parking

§ 16-601. Exemptions from requirements.
§ 16-602. Required off-street parking.

Subtitle 7
Required Bicycle Parking

§ 16-701. Design standards for all bicycle parking.
§ 16-702. Location.
§ 16-703. Short-term bicycle parking standards.
§ 16-704. Long-term bicycle parking standards.
§ 16-705. Required number of bicycle spaces.

Subtitle 8
Additional Vehicle Storage Requirements

§ 16-801. Commercial vehicles in residential areas.
§ 16-802. Recreational vehicles.
§ 16-803. Storage, etc., of abandoned, etc., vehicles.

Subtitle 9
Off-Street Loading Requirements

§ 16-901. Design of off-street loading spaces.
§ 16-902. Required off-street loading spaces.

TITLE 17
SIGNS

Subtitle 1
Purpose of Title; Definitions

§ 17-101. Purpose.
§ 17-102. Definitions.

Subtitle 2
Placement, Design, and Construction

§ 17-201. Location restrictions.
§ 17-202. General design and construction.
§ 17-203. Sign and premises maintenance.

Subtitle 3
Sign Dimension Measurement Methodology

§ 17-301. In general.
§ 17-302. Sign area – General.
§ 17-303. Sign area – Supports and uprights excluded.
§ 17-304. Sign area – Multi-faced signs.
§ 17-305. Sign area – Three-dimensional signs.
§ 17-306. Sign height.

Subtitle 4
Sign Permit and Special Designations

§ 17-401. Building permit for signs required.
§ 17-402. Classic signs.

Subtitle 5
Exempt Signs

§ 17-501. In general.
§ 17-502. Activities exempt from permit.
§ 17-503. Banners (Temporary).
§ 17-504. Bike-sharing stations, advertising signs on.
§ 17-505. Flags.
§ 17-506. Garage or yard sale signs.
§ 17-507. Governmental signs.
§ 17-508. House number signs.
§ 17-509. Memorial plaques, etc.
§ 17-510. Miscellaneous informational matter.
§ 17-511. Official public notices.
§ 17-512. Parking regulation signs.
§ 17-513. Non-commercial or political signs.
§ 17-514. Real estate signs.
§ 17-515. Warning signs.
§ 17-516. Window signs (Temporary).
§ 17-517. “Sponsor-a-road” signs.

Subtitle 6
Prohibited Signs

§ 17-601. Prohibited signs.
§ 17-602. Alcoholic beverage and cigarette advertising signs.
§ 17-603. Billboards.
§ 17-604. Moving or flashing signs.
§ 17-605. Obscene signs.
§ 17-606. Painted signs.
§ 17-607. Portable signs.

Subtitle 7
Temporary Signs

§ 17-701. Temporary signs.
§ 17-702. A-frame signs.
§ 17-703. Attention-getting devices.
§ 17-704. Temporary construction signs.
§ 17-705. Temporary subdivision or planned unit development signs.
§ 17-706. Temporary pole signs.
§ 17-707. Temporary wall signs.

Subtitle 8
Permanent Signs

§ 17-801. Permits required.
§ 17-802. Awnings and canopies.
§ 17-803. Electronic message signs.
§ 17-804. Freestanding signs.
§ 17-805. Marquees.
§ 17-806. Menu board signs.
§ 17-807. Nameplates.
§ 17-808. Neighborhood identification signs.
§ 17-809. Open-Space directional signs.
§ 17-810. Open-Space identification signs.
§ 17-811. Parking access signs.
§ 17-812. Projecting signs.
§ 17-813. Residential identification signs.
§ 17-814. Roof signs.
§ 17-815. Wall signs.
§ 17-816. Window signs.

Subtitle 9
Areas of Special Sign Control

§ 17-901. Purpose.
§ 17-902. Applicability.
§ 17-903. Sign Plan.
§ 17-904. Process.

Subtitle 10
Nonconforming Signs

§ 17-1001. In general.

TITLE 18
NONCONFORMITIES

Subtitle 1
Purpose of Title

§ 18-101. Purpose.

Subtitle 2
Definitions: General Provisions

§ 18-201. Definitions.
§ 18-202. Authority to continue.
§ 18-203. Safety regulations.
§ 18-204. Nonconformity not established by casual, etc., uses.
§ 18-205. Nonconformity with off-street parking requirements.
§ 18-206. Determination of nonconformity.

Subtitle 3
Nonconforming Uses

§ 18-301. Continuation.
§ 18-302. Expansion of use.
§ 18-303. Repairs and alterations.
§ 18-304. Restoration of damaged structures.
§ 18-305. Relocation.
§ 18-306. Change of use.
§ 18-307. Discontinuance or abandonment.
§§ 18-308 to 18-309. *{Reserved}*
§ 18-310. Junk ... yards; Vehicle dismantling...; Landfills.

Subtitle 4
Nonconforming Structures

§ 18-401. Application of subtitle.
§ 18-402. Continuation.
§ 18-403. Expansion of structure.
§ 18-404. Repairs and alterations.
§ 18-405. Restoration of damaged structures.
§ 18-406. Relocation.
§§ 18-407 to 18-410. *{Reserved}*
§ 18-411. Exceptions – Administrative bulk adjustments.
§ 18-412. Exceptions – Multi-family structures.
§ 18-413. Structures in Hospital Campus and Educational Campus Districts.

Subtitle 5
Nonconforming Signs

§ 18-501. In general.
§ 18-502. Alterations, replacements, relocations, etc.
§ 18-503. Restoration of damaged signs.
§ 18-504. Changes to billboards.

Subtitle 6
Nonconforming Lots

§ 18-601. Construction of single-family dwelling.

Subtitle 7
Mandatory Termination of Certain Uses

§ 18-701. Retail goods establishment – with alcoholic beverage sales.
§ 18-702. Taverns.

TITLE 19
PROHIBITED CONDUCT; ENFORCEMENT; ADMINISTRATIVE AND JUDICIAL REVIEW

Subtitle 1
Prohibited Conduct

§ 19-101. Prohibited conduct.
§ 19-102. Each day a separate offense.

Subtitle 2
Enforcement

Part I. Definitions

§ 19-201. “Person responsible” defined.
§§ 9-202 to 9-205. *{Reserved}*

Part II. Violation Notice

§ 19-206. Issuance.
§ 19-207. Service.
§ 19-208. Extension of time limit.
§§ 19-209 to 19-210. *{Reserved}*

Part III. Subsequent Proceedings

§ 19-211. Remedies generally.
§ 19-212. Remedies not exclusive.
§ 19-213. Civil court proceedings.
§ 19-214. Enforcement by citation.
§ 19-215. Criminal penalties.

Subtitle 3
Administrative and Judicial Review

§ 19-301. Administrative appeals.
§ 19-302. Judicial review.
§ 19-303. Appellate review.

LIST OF ZONING TABLES

Table 7-202: Open-Space Districts – Permitted and Conditional Uses
Table 7-203: Open-Space Districts – Bulk and Yard Regulations

Table 8-301: Detached and Semi-Detached Residential Districts – Permitted and Conditional Uses
Table 8-401: Detached and Semi-Detached Residential Districts – Bulk and Yard Regulations

Table 9-301: Rowhouse and Multi-Family Residential Districts – Permitted and Conditional Uses
Table 9-401: Rowhouse and Multi-Family Residential Districts – Bulk and Yard Regulations

Table 10-301: Commercial Districts – Permitted and Conditional Uses
Table 10-401: Commercial Districts (C-1 to C-4) – Bulk and Yard Regulations
Table 10-401: Commercial Districts (C-5) – Bulk and Yard Regulations

Table 11-301: Industrial Districts – Permitted and Conditional Uses
Table 11-401: Industrial Districts – Bulk and Yard Regulations

Table 12-301: Office-Residential Districts – Permitted and Conditional Uses
Table 12-302: Office-Residential Districts – Bulk and Yard Regulations

Table 12-402: Transit-oriented Development Districts – Permitted and Conditional Uses
Table 12-403: Transit-oriented Development Districts – Bulk and Yard Regulations

Table 12-501: Educational Campus Districts – Permitted and Conditional Uses
Table 12-502: Educational Campus Districts – Bulk and Yard Regulations

Table 12-601: Hospital Campus Districts – Permitted and Conditional Uses
Table 12-602: Hospital Campus Districts – Bulk and Yard Regulations

Table 12-903(1): Canton Waterfront Area
Table 12-903(2): Fells Point Waterfront Area
Table 12-903(3): Key Highway Waterfront Area
Table 12-903(4): Middle Branch Waterfront Area

Table 12-1302: Port Covington District – Permitted and Conditional Uses
Table 12-1303: Port Covington District – Bulk and Yard Regulations

Table 15-405: Mount Vernon Neighborhood Height Map

Table 15-601: Permitted Encroachments into Required Yards

Table 16-402: Off-Street Parking Dimensions
Table 16-406: Required Off-Street Parking
Table 16-501: Collective Parking Calculation
Table 16-705: Required Bicycle Spaces
Table 16-902: Off-Street Loading Requirements

Table 17-804: Freestanding Sign Regulations
Table 17-812: Projecting Sign Regulations

{PAGE LEFT INTENTIONALLY BLANK}

TITLE 1
GENERAL PROVISIONS

SUBTITLE 1
PURPOSE OF TITLE

§ 1-101. In general.

This title contains:

(1) rules of interpretation for this Code;

(2) generic use definitions; and

(3) definitions of general terms used in this Code.
(Ord. 16-581.)

SUBTITLE 2
RULES OF INTERPRETATION

§ 1-201. In general.

In interpreting and applying this Code, the following rules of interpretation apply.
(Ord. 16-581.)

§ 1-202. Captions or headings.

The captions or headings of the various sections and subsections:

(1) are for convenience of reference only, intended to summarize the statutory provisions that follow; and

(2) are not law and are not to be taken as affecting the meaning or effect of the law.
(Ord. 16-581.)

§ 1-203. Code not a permit.

Nothing in this Code may be taken to be a consent, license, or permit to:

(1) use any property;

(2) locate, erect, or maintain any structure or facility; or

(3) carry on any trade, industry, occupation, or activity.
(Ord. 16-581.)

§ 1-204. Conflicting provisions.

(a) *Code sets minimum requirements.*

In their interpretation and application, the provisions of this Code are intended as the minimum requirements for the promotion of the public health, safety, and welfare.

(b) *Most restrictive provision governs.*

If any condition or requirement imposed by this Code is either more or less restrictive than a comparable condition or requirement imposed by any other provision of this Code or of any other law, rule, or regulation of any kind, including an applicable Urban Renewal Plan, the condition or requirement that is the more restrictive governs.
(Ord. 16-581.)

§ 1-205. Gender.

Words denoting one gender apply to the other genders as well.
(Ord. 16-581.)

§ 1-206. "Includes" or "including".

"Includes" or "including" means by way of illustration and not by way of limitation.
(Ord. 16-581.)

§ 1-207. Mandatory, prohibitory, and permissive terms.

(a) *Mandatory terms.*

"Must" and "shall" are each mandatory terms used to express a requirement or to impose a duty.

(b) *Prohibitory terms.*

"Must not," "may not", and "no... may" are each mandatory negative terms used to establish a prohibition.

(c) *Permissive terms.*

"May" is permissive.
(Ord. 16-581.)

§ 1-208. Number.

The singular includes the plural and vice versa.
(Ord. 16-581.)

§ 1-209. References to "this Code".

Throughout this article, all references to "this Code" refer to this Article, the Zoning Code of Baltimore City.
(Ord. 16-581.)

§ 1-210. References to other laws.

Whenever a provision of this Code refers to any part of the City Code or to any other law, the reference applies to any subsequent amendment of the law referred to, unless the referring provision expressly provides otherwise.
(Ord. 16-581.)

§ 1-211. Severability.

(a) *In general.*

Except as specified in subsection (b) of this section:

(1) all provisions of this Code are severable; and

(2) if a court determines that a word, phrase, clause, sentence, paragraph, subsection, section, or other provision is invalid or that the application of any part of the

provision to any person or circumstances is invalid, the remaining provisions and the application of those provisions to other persons or circumstances are not affected by that decision.

(b) *Exceptions*.

Subsection (a) of this section does not apply:

(1) to the extent that a statute specifically provides otherwise; or

(2) if the court finds that the remaining provisions alone are incomplete and incapable of being executed in accordance with the legislative intent.

(Ord. 16-581.)

§ 1-212. Tables.

(a) *In general*.

(1) Except for the Cumulative Table of Uses, the "Tables" contained in this Code and the statutory references to them are part of this Code and of the laws enacted by it.

(2) The Cumulative Table of Uses that accompanies this Code:

(i) is for convenience of reference only, intended as a guide to this Code; and

(ii) is not law and is not to be taken as affecting the meaning or effect of the law.

(b) *Use symbology*.

In Tables of Uses:

(1) a "P" indicates that a use is permitted within that zoning district;

(2) a "CB" indicates that a use is a conditional use within that zoning district requiring approval by the Board of Municipal and Zoning Appeals;

(3) a "CO" indicates that a use is a conditional use within that zoning district requiring approval by Ordinance of the Mayor and City Council; and

(4) no letter (that is, a blank space) or the absence of the use from the table indicates that the use is not allowed within that zoning district.

(Ord. 16-581.)

§ 1-213. Time computations.

(a) *Computation of time after an act, event, or default.*

(1) In computing any period of time prescribed by this Code, the day of the act, event, or default after which the designated period of time begins to run is not included.

(2) If the period of time allowed is more than 7 days, intermediate Saturdays, Sundays, and legal holidays are counted.

(3) If the period of time allowed is 7 days or less, intermediate Saturdays, Sundays, and legal holidays are not counted.

(4) The last day of the period so computed is included unless it is a Saturday, Sunday, or legal holiday, in which event the period runs until the end of the next day that is not a Saturday, Sunday, or legal holiday.

(b) *Computation of time before a day, act, or event*.

(1) In determining the latest day for performing an act that is required by this Code to be performed a prescribed number of days before a certain day, act, or event, all days preceding that day, including intervening Saturdays, Sundays, and legal holidays, are counted in the number of days so prescribed.

(2) The latest day is included in the determination unless it is a Saturday, Sunday, or legal holiday, in which event the latest day is the first preceding day that is not a Saturday, Sunday, or legal holiday.

(Ord. 16-581.)

§ 1-214. Undefined terms.

Terms not defined in this Code are to be interpreted in accord with their ordinarily accepted meanings, as their context implies.

(Ord. 16-581.)

§ 1-215. "Used" or "Occupied".

Whenever the word "used" or "occupied" is used, it is to be construed as though followed by the phrase "or arranged, intended, or designed to be used/occupied".

§ 1-216. *{Reserved}*

§ 1-217. Uses, generic and specific.

(a) *Generic uses described.*

Certain uses in this Code are defined to be inclusive of many specific uses so as to minimize overly detailed lists of uses for the various zoning districts established by this Code. These inclusive uses are referred to in this Code as "generic uses".

(b) *Relationship to specific.*

(1) If a specific use does not fall within the definition of a generic use and is not specifically listed in a use table for a zoning district, the specific use is prohibited in that district.

(2) If a specific use is listed in any use table, that specific use cannot be interpreted as falling within any generic use.

(3) If the definition of a generic use specifically excludes a specific use, the generic use cannot be interpreted as allowing that specific use.

(Ord. 16-581.)

§ 1-218. Uses prohibited citywide.

(a) *Application of section.*

This section and its listing of certain prohibited uses:

(1) is not exhaustive; and

(2) may not be construed to imply that any use not listed here is a permitted or conditional use.

(b) *Listing.*

The following uses are prohibited in all zoning districts of the City:

(1) incinerators;

(2) junk or scrap storage and yards;

(3) nuclear power plants;

(4) solid waste sanitary landfills;

(5) storage on barges and belt conveyor systems used for the transfer of materials, but this prohibition does not apply to the continuous process of unloading or loading processed metal (as defined in § 1-308) for and during its transfer to or from a docked barge or vessel awaiting shipment; and

(6) vehicle dismantling facilities.

(Ord. 16-581.)

§ 1-219. Use and Site Development Standards.

(a) *Permitted and conditional uses.*

Title 14 {"Use Standards"} of this Code sets forth specific standards for certain permitted and conditional uses listed in the use tables.

(b) *Accessory structures and uses.*

Title 15 {"Site Development Standards"} of this Code sets forth specific requirements, including measurement methodologies, for certain accessory structures and uses.

(Ord. 16-581.)

SUBTITLE 3
DEFINITIONS

§ 1-301. In general.

In this Code, the following terms have the meanings indicated.
(Ord. 16-581.)

§ 1-302. "Abut" to "Awning".

(a) *Abut.*

"Abut" means to share a common lot line or zoning district boundary without being separated by a street or alley.

(b) *Accessory structure.*

"Accessory structure" means a structure that is:

(1) customarily incidental and subordinate to the use of the principal structure served;

(2) subordinate in lot coverage and floor area to the principal structure served; and

(3) except in a planned unit development, located on the same lot as the principal structure served.

(c) *Accessory use.*

"Accessory use" means a use that is:

(1) customarily incidental and subordinate to the principal use of the lot or principal structure served; and

(2) except in a planned unit development, located on the same lot as the principal use or principal structure served.

(d) *Addition; Enlargement.*

"Addition" or "enlargement", when referring to a structure, means construction that increases the height, length, width, or floor area of the structure.

(e) *Adjacent.*

"Adjacent" means to lie near, close to, or in the vicinity of.

(f) *Adjoining.*

"Adjoining" means to touch, abut, or border on, as distinguished from adjacent.

(g) *Adult day-care center*.

See "Day-care center: Adult".

(h) *Adult day-care home.*

See "Day-care home: Adult".

(i) *Adult use.*

(1) *General.*

"Adult use" means any establishment that offers its customers, for viewing, purchase, loan, or otherwise, sexually explicit materials or entertainment that, applying contemporary standards, the average individual would find, taken as a whole, appeals to the prurient interest.

(2) *Inclusions.*

"Adult use" includes any:

(i) adult-entertainment business, as defined in City Code Article 15, Subtitle 1 {"Adult-Entertainment Businesses"};

(ii) adult book or video store, as defined in paragraph (3) of this subsection; and

(iii) peep show establishment, as defined in City Code Article 13, Subtitle 13 {"Licensing of Peep Show Establishments"}.

(3) *"Adult book or video store" defined.*

(i) *In general.*

"Adult book or video store" means a place of activity the principal use of which is to sell, transfer, or disseminate sexually explicit material, including the following:

(A) any picture, photograph, drawing, sculpture, video, or similar visual representation or image of an individual or part of the human body that:

1. depicts nudity, sadomasochistic abuse, sexual conduct, or sexual excitement; and

2. is harmful to minors; or

(B) any book, pamphlet, magazine, printed matter however reproduced, or sound recording that:

1. contains any matter enumerated in item A of this subparagraph or any explicit and detailed verbal descriptions or narrative accounts of sadomasochistic abuse, sexual conduct, or sexual excitement; and

2. taken as a whole, is harmful to minors.

(ii) *Supplemental definitions.*

In this paragraph (3), "harmful to minors", "nudity", "sadomasochistic abuse", "sexual conduct", and "sexual excitement" have meanings stated in City Code Article 19, § 36-1 {"Minors - Indecent Materials: Definitions"}.

(i-1) *After-hours establishment.*

"After-hours establishment" means any of the following uses that is open for any period of time after 2 a.m. and before 6 a.m. on any day:

(1) a banquet hall, a lodge or social club, or a similar place; or

(2) an adult use, a lounge, live entertainment as a principal use, or a restaurant that provides live entertainment as an accessory use.

(j) *Age-restricted multi-family dwelling.*

"Age-restricted multi-family dwelling" means a multi-family dwelling that restricts occupancy to individuals 62 years old or older.

(k) *Age-restricted residential-care facility.*

"Age-restricted residential-care facility" means a residential-care facility that restricts residents to individuals 62 years old or older.

(l) *Alley.*

"Alley" means any roadway that is open to the general public and primarily designed and used for the servicing of adjacent buildings through their rear or side entrances.

(m) *Alteration.*

"Alteration" means a change in the size, shape, occupancy, or use of a structure.

(n) *Alternative energy system.*

(1) *In general.*

"Alternative energy system" means equipment used to generate thermal or electrical energy from renewable sources.

(2) *Inclusions.*

"Alternative energy system" includes:

(i) a commercial alternative energy system;

(ii) a community-based alternative energy system; and

(iii) a private alternative energy system.

(o) *Alternative energy system: Commercial.*

"Alternative energy system: Commercial" means an alternative energy system designed to produce greater levels of energy for consumers with high energy demands, such as industrial users, or for supply to an electric grid.

(p) *Alternative energy system: Community-based.*

"Alternative energy system: Community-based" means an alternative energy system that:

(1) primarily produces energy for consumption on site by a property owner or for supply to an electric grid; and

(2) is supported by community members who purchase energy from the system and who might benefit financially from the system.

(q) *Amateur (ham) radio equipment.*

"Amateur (ham) radio equipment" has the meaning stated in § 15-502 {"Amateur (ham) radio equipment"} of this Code.

(r) *Animal clinic.*

(1) *In general.*

"Animal clinic" means an establishment used by a licensed veterinarian:

(i) for the immunization, diagnosis, or treatment of animals or for surgery on animals and

(ii) for boarding animals during their treatment or convalescence.

(2) *Exclusions.*

"Animal clinic" does not include a kennel.

(s) *Architectural feature.*

"Architectural feature" means a part or projection of a structure, excluding a sign, that:

(1) contributes to the aesthetics of the structure; and

(2) is not needed either for the structural integrity of the structure or to make the structure habitable.

(t) *Art gallery.*

(1) *In general.*

"Art gallery" means an establishment that engages in the sale, loan, or display of paintings, sculptures, photographs, video art, or other works of art.

(2) *Exclusions.*

"Art gallery" does not include:

(i) a cultural facility, such as a library, museum, or non-commercial gallery that might also display works of art;

(ii) an arts studio; or

(iii) an arts studio - industrial.

(u) *Arts studio.*

(1) *In general.*

"Arts studio" means an establishment in which an art, a type of exercise, or an activity is taught, practiced, or studied, such as dance, martial arts, photography, music, painting, gymnastics, or yoga.

(2) *Inclusions.*

"Arts studio" includes:

(i) performance-space related to the classes taught on-site; and

(ii) recording studios.

(3) *Exclusions.*

"Arts studio" does not include an establishment that teaches the types of arts taught in an arts studio – industrial.

(v) *Arts studio: Industrial.*

"Arts studio: Industrial" means a studio for artisan-related crafts, such as small-scale metalworking, glassblowing, furniture making, pottery, leathercraft, and similar activities.

(w) *Awning.*

"Awning" means an architectural projection that:

(1) comprises a lightweight frame structure over which a covering is attached;

(2) is designed to provide weather protection, identity, or decoration; and

(3) is partially or wholly supported by the building to which it is attached.

(Ord. 16-581; Ord. 17-015; 17-056.)

§ 1-303. "Bail bond establishment" to "Child day-care home".

(a) *Bail bond establishment.*

"Bail bond establishment" means an establishment in which a State-licensed or -approved bail bondsman provides bail bondsman services, whether for compensation or not.

(b) *{Reserved}*

(c) *Banquet hall.*

(1) *In general.*

"Banquet hall" means an establishment:

(i) for which all events are directly managed by the owner of the facility or by a person regularly employed by the owner and responsible to the owner for the on-site management of all events held in that facility and for event arrangements;

(ii) that is used regularly for serving food or beverage provided by the owner or by caterers and suppliers approved in advance by the owner;

(iii) that serves designated groups that, before the day of the event, have reserved the facility for banquets or meetings and provided all insurance certificates, security contracts, off-street parking contracts required by the facility's owner;

(iv) to which the general public is not admitted;

(v) for which no admission fee is charged at the door; and

(vi) in which no third party promoter is involved or stands to profit.

(2) *Supplemental definition.*

In paragraph (1)(vi) of this subsection, "promoter" means a person whose primary business is to organize, schedule, and operate one-time events in various leased venues through wide-scale promotions and advance sales of general admission tickets advertised

primarily by flyers, websites, e-blasts, and social media and customarily selling general admission tickets at the door.

(3) *Inclusions.*

"Banquet hall" includes an establishment that provides live entertainment as an accessory to the use described in paragraph (1) of this subsection.

(4) *Exclusions.*

"Banquet hall" does not include any restaurant or tavern.

(d) *Basement.*

"Basement" means that portion of a building that has its floor subgrade (below ground level) on all sides.

(e) *Bay window.*

"Bay window" means a window that:

(1) projects outward from a building;

(2) begins at least 2 feet above the ground; and

(3) has no structural support to the ground.

(f) *Bed and breakfast.*

"Bed and breakfast" means an owner-occupied, single-family dwelling that:

(1) is used primarily as a the owner's personal home; but

(2) also, while the owner is in residence, provides lodging in 3 or fewer guest rooms to members of the general public who have primary residences elsewhere.

(g) *Billboard.*

(1) *In general.*

"Billboard" means any sign that directs attention to a business, commodity, service, event, or other activity that is:

(i) sold, offered, or conducted somewhere other than on the property on which the sign is located; or

(ii) sold, offered, or conducted on that property only incidentally, if at all.

(2) *Exclusions.*

"Billboard" does not include banners or signs mounted on streetlights or similar structures in the public right-of-way.

(h) *Blockface.*

"Blockface" means all of 1 side of a given street between 2 consecutive intersecting streets.

(i) *Boat manufacturing, repair, and sales.*

(1) *Inclusions.*

"Boat manufacturing, repair, and sales" includes the following activities:

(i) assembly and installation of sails, masts, bridges, or other major components;

(ii) sandblasting or other preparation and painting of hulls;

(iii) installation of navigational instruments;

(iv) testing of electrical, mechanical, and other systems; and

(v) incidental storage.

(2) *Exclusions.*

"Boat manufacturing, repair, and sales" does not include the leasing of dry dock or marina storage for individual boat owners.

(j) *Body art establishment.*

(1) *In general.*

"Body art establishment" means an establishment that offers body piercing, non-medical body modification, or tattooing services.

(2) *Exclusions.*

"Body art establishment" does not include an establishment that only offers ear piercing.

(k) *Broadcasting station (TV or radio).*

(1) *In general.*

"Broadcasting station (tv or radio)" means commercial and public communications facilities, including radio and television broadcasting and receiving stations and studios.

(2) *Exclusions.*

"Broadcasting station (tv or radio)" does not include freestanding TV or radio antennas.

(l) *Buffer (CBCA).*

"Buffer", as it applies to the Chesapeake Bay Critical Area, has the meaning stated in § 7-402 {"CBCA Overlay: Definitions"} of this Code.

(m) *Building.*

"Building" means any structure used or intended for supporting or sheltering any use or occupancy.

(n) *Building: Principal.*

"Building: Principal" means non-accessory building in which a principal use is conducted.

(o) *Canopy.*

"Canopy" means a permanent structure or architectural projection that:

(1) is of rigid construction over which a covering is attached;

(2) is designed to provide weather protection, identity or decoration; and

(3) is structurally independent or supported by attachment to a building on one or more sides.

(p) *Car wash.*

(1) *In general.*

"Car wash" means an establishment for washing or cleaning motor vehicles, whether by using mechanical devices or hand labor.

(2) *Self-Service.*

"Car wash" includes facilities for self-service motor vehicle washing or cleaning.

(q) *Caretaker's dwelling.*

See "Dwelling: Caretaker's".

(r) *Carnival; Circus.*

"Carnival" or "circus" means a use of land for:

(1) circuses, carnivals, fetes, bazaars, and similar events;

(2) feats of horseback-riding ability, acrobatic stunts, trained animal acts, clowning, and similar performances;

(3) mechanical rides or other amusement devices to which the public is admitted; and

(4) temporary stands or facilities for selling or dispensing products for human consumption in connection with these uses.

(s) *Carriage house.*

"Carriage house" means an accessory structure of 2-story construction that was formerly used or intended to be used for the storage of horses and carriages.

(t) *Carry-out food shop.*

"Carry-out food shop" means an establishment where prepared food is served in disposable containers or wrappers from a serving counter, primarily for off-premises consumption.

(u) *Cemetery.*

(1) *In general.*

"Cemetery" means land used or dedicated to the burial of the dead.

(2) *Inclusions.*

"Cemetery" includes:

(i) a crematorium;

(ii) mausoleums;

(iii) a funeral home, if operating within the boundaries of the cemetery; and

(iv) necessary sales and maintenance facilities.

(v) *Check-cashing establishment.*

"Check-cashing establishment" means an establishment, other than a financial institution, that provides a check-cashing service, for a fee, to the general public.

(w) *Child day-care center.*

See "Day-care center: Child".

(x) *Child day-care home.*

See "Day-care home: Child".
(Ord. 16-581; Ord. 17-015.)

§ 1-304. "Chimney" to "Day-care center: Child".

(a) *Chimney.*

"Chimney"means a vertical shaft of reinforced concrete, masonry, or other approved material that encloses 1 or more flues, for the purpose of removing the products of combustion from solid, liquid, or gaseous fuel.

(b) *{Reserved}*

(c) *Clinic.*

See "Animal clinic"; "Health-care clinic".

(d) *Commercial alternative energy system.*

See "Alternative energy system: Commercial".

(e) *Commercial college.*

See "Educational facility: Commercial-vocational".

(f) *Commercial vehicle.*

"Commercial vehicle" has the meaning stated in City Code Article 31 {"Transit and Traffic"}, § 1-1(f) {"Definitions – A to L: Commercial vehicle"}.

(g) *Community center.*

(1) *In general.*

"Community center" means a facility in which people who live in the neighborhood or community are able to meet and carry on cultural, social, or recreational activities.

(2) *Inclusions.*

"Community center" includes indoor or outdoor recreational facilities.

(h) *Community-managed open-space garden.*

(1) *In general.*

"Community-managed open-space garden" means an open-space area that:

(i) is maintained by more than 1 household; and

(ii) is used for traditional community-garden activities of planting, cultivating, harvesting, maintaining, and distributing fruits, flowers, vegetables, or ornamental plants.

(2) *Inclusions*.

"Community-managed open-space garden" includes:

(i) accessory sheds, gazebos, and pergolas;

(ii) temporary greenhouses and similar structures to extend the growing season; and

(ii) the provision of space for related open-air recreation, active or passive, but not including playground equipment.

(i) *Community-managed open-space farm.*

(1) *In general.*

"Community-managed open-space farm" means an open-space area that:

(i) is maintained by more than 1 household; and

(ii) in addition to the uses permitted in a community-managed open-space garden, is used for 1 or more of the following:

(A) the keeping of livestock and animals;

(B) temporary farm stands, but no more than 1 per lot; and

(C) the receipt and free redistribution of organic waste material for composting.

(2) *Inclusions*.

"Community-managed open-space farm" includes on-site storage, including storage for farmstands.

(j) *Community-based alternative energy system.*

See "Alternative energy system: Community-based".

(k) *Composting.*

"Composting" means the processing of organic waste material, such as yard and food waste, under controlled conditions to yield a nuisance-free humus-like product.

(l) *Comprehensive Master Plan.*

"Comprehensive Master Plan" means the Master Plan adopted under City Charter Article VII, § 74 {"Department of Planning: Master Plan"} and the State Land Use Article.

(m) *Comprehensive rezoning.*

"Comprehensive rezoning" means an ordinance that is:

(1) initiated by City government to modify the zoning classifications of multiple properties;

(2) based on considerations concerning the common needs of a substantial geographic area, involving a considerable number of properties;

(3) designed to control and direct the use of land and structures according to present and planned future conditions; and

(4) the product of:

(i) careful consideration and extensive study by the Planning Department; and

(ii) review by the Planning Commission.

(n) *Conditional use.*

See "Use: Conditional".

(o) *Contractor storage yard.*

"Contractor storage yard" means land or structures used primarily for the storage of equipment, vehicles, machinery, building materials, paint, piping, or electrical components being used by the owner or occupant of the premises in the conduct of a building trade.

(p) *Convention center.*

(1) *In general.*

"Convention center" means an establishment that accommodates conventions, conferences, seminars, product displays, recreation activities, and entertainment functions.

(2) *Inclusions.*

"Convention center" includes accessory uses such as:

(i) temporary outdoor displays; and

(ii) food and beverage preparation and service for on-premise consumption.

(q) *Corner lot.*

See "Lot: Corner".

(r) *Corner-side lot line.*

See "Lot line: Corner-side".

(s) *Cornice.*

"Cornice" means a continuous molded projection that:

(1) extends outward from an exterior wall at the roof line;

(2) crowns a wall; or

(3) divides a wall horizontally.

(t) *Country club.*

"Country club" means a club organized and operated primarily for social and both indoor and outdoor recreation purposes, with recreation facilities for members, their families, and invited guests.

(u) *Critical Area (CBCA).*

"Critical Area", as it applies to the Chesapeake Bay Critical Area, has the meaning stated in § 7-402 {"CBCA Overlay: Definitions"} of this Code.

(v) *Critical Area Management Program (CBCA).*

"Critical Area Management Program", as it applies to the Chesapeake Bay Critical Area, has the meaning stated in § 7-402 {"CBCA Overlay: Definitions"} of this Code.

(w) *Cultural facility.*

(1) *In general*.

"Cultural facility" means a facility that provides cultural services and facilities to the public.

(2) *Illustrations.*

"Cultural facility" includes any of the following, whether operated by a public, non-profit, or private entity:

(i) a museum;

(ii) an historical society; or

(iii) a library.

(3) *Inclusions.*

"Cultural facility" includes the following accessory uses designed and intended primarily for patrons of the facility:

(i) a gift or souvenir shop; and

(ii) a restaurant or refreshment stands.

(x) *Day-care center: Adult.*

(1) *In general.*

"Day-care center: Adult" means an establishment that provides care for 3 or more elderly or functionally impaired adults on less than a 24-hour basis.

(2) *Exclusions.*

"Day-care center: Adult" does not include:

(i) a program that, as an accessory use to a place of worship, provides care for elderly or functionally impaired adults; or

(ii) an adult day-care home.

(y) *Day-care center: Child.*

(1) *In general.*

"Day-care center: Child" means an establishment that provides care for 3 or more children on less than a 24-hour basis.

(2) *Exclusions.*

"Day-care center: Child" does not include:

(i) a program that, as an accessory use to an educational facility or a place of worship, provides care for children; or

(ii) a child day-care home.

(Ord. 16-581; Ord. 17-015.)

§ 1-305. "Day-care home: Adult" to "Electric substation: Outdoor".

(a) *Day-care home: Adult.*

(1) *In general.*

"Day-care home: Adult" means a dwelling in which a resident of the dwelling provides care for up to 8 elderly or functionally impaired adults who do not spend the night at the dwelling.

(2) *Exclusion.*

"Day-care home: Adult" does not include an adult day-care center.

(b) *Day-care home: Child.*

(1) *In general.*

"Day-care home: Child" means a dwelling in which a resident of the dwelling provides care for up to 8 children, including the resident's own.

(2) *Exclusions.*

"Day-care home: Child" does not include a child day-care center.

(c) *Dental clinic.*

See "Health-care clinic".

(d) *Detached dwelling.*

See "Dwelling: Detached".

(e) *Development (CBCA).*

"Development", as it applies to the Chesapeake Bay Critical Area, has the meaning stated in § 7-402 {"CBCA Overlay: Definitions"} of this Code.

(f) *Disturb (CBCA).*

"Disturb", as it applies to the Chesapeake Bay Critical Area, has the meaning stated in § 7-402 {"CBCA Overlay: Definitions"} of this Code.

(g) *Dormitory.*

"Dormitory" means a structure that:

(1) is owned or operated by or for an educational institution or a hospital; and

(2) provides group sleeping accommodations in 1 room or in a series of closely associated rooms for students not members of the same family.

(h) *Drive-through facility.*

"Drive-through facility" means an establishment that provides products or services through an attendant, window, or automated machine to individuals occupying motor vehicles in a designated stacking space.

(i) *Driveway.*

"Driveway" means a connecting way that runs between a street and an off-street parking or drop-off area and is designed to permit a vehicle to leave the roadway at grade and enter entirely into the off-street area.

(j) *Driving range.*

(1) *In general.*

"Driving range" means an area that is equipped with distance markers, clubs, balls, and tees for practicing the striking of golf balls.

(2) *Inclusions.*

"Driving range" includes an accessory snack bar and pro-shop.

(k) *Dry storage marina.*

See "Marina: Dry storage".

(l) *Dwelling.*

"Dwelling" means a building or part of a building used for residential occupancy.

(m) *Dwelling: Caretaker's.*

"Dwelling: Caretaker's" means a residence for an individual employed on a site to care for and protect individuals and property on the site or on adjacent sites.

(n) *Dwelling: Detached.*

"Dwelling: Detached" means a dwelling that contains a single dwelling unit and is not attached to any other dwelling.

(o) *Dwelling: Live-Work.*

"Dwelling: Live-Work" means a structure that combines a single dwelling unit with a non-residential use that:

(1) is permitted in the zoning district in which the structure is located and used predominantly by 1 or more of the unit's residents; or

(2) is an arts-related activity, such as painting, photography, sculpture, music, and film, and conducted predominantly by 1 or more of the unit's residents.

(p) *Dwelling: Multi-family.*

(1) *In general.*

"Dwelling: Multi-family" means a dwelling that contains 2 or more dwelling units.

(2) *Inclusions.*

"Dwelling: Multi-family" includes common facilities for residents, such as laundry rooms.

(q) *Dwelling: Multi-family (Age-restricted).*

See "Age-restricted multi-family dwelling".

(r) *Dwelling: Rowhouse.*

"Dwelling: Rowhouse" means 1 of 3 or more buildings, each of which contains a single dwelling unit used for residential occupancy, with each building having its own private entrance and being joined to the others by a party or shared wall.

(s) *Dwelling: Semi-detached.*

"Dwelling: Semi-detached" means 1 of 2 buildings, each of which contains a single dwelling unit used for residential occupancy, with each building having its own private entrance and being joined to the other by a party or shared wall and not otherwise attached to any other dwelling.

(t) *Dwelling: Single-family.*

"Dwelling: Single-family" means a dwelling that contains only 1 dwelling unit.

(u) *Dwelling unit.*

"Dwelling unit" means 1 or more rooms in a dwelling that:

(1) are used as living facilities for no more than 1 family; and

(2) contain permanently installed bathroom and kitchen facilities reserved for the occupants of those rooms.

(v) *Easement.*

"Easement" means legal permission granted by a property owner to another for the use of the property for specific purposes, such as the construction of accessways, utilities, and roadways.

(w) *Eave.*

"Eave" means the projecting lower edges of a roof that overhang an exterior wall of a building.

(x) *Educational facility: Commercial-vocational.*

(1) *In general.*

"Educational facility: Commercial-vocational" means:

(i) a post-secondary school that teaches industrial, clerical, managerial, commercial, or artistic skills; or

(ii) a school conducted as a commercial enterprise, such as a driving school.

(2) *Exclusions.*

"Educational facility: Commercial-vocational" does not include a post-secondary educational facility.

(y) *Educational facility: Post-secondary.*

(1) *In general.*

"Educational facility: Post-secondary" means a post-secondary institution for higher learning, such as a university or college, that grants associate, bachelor, master, or doctoral degrees.

(2) *Inclusions.*

"Educational facility: Post-secondary" includes post-secondary theological schools for training ministers, priests, rabbis, or other religious functionaries.

(3) *Exclusions.*

"Educational facility: Post-secondary" does not include a commercial-vocational educational facility.

(z) *Educational facility: Primary and secondary.*

"Educational facility: Primary and secondary" means a public, private, or parochial school that offers instruction at any of the elementary through high school levels.

(aa) *Electric substation.*

(1) *General*.

"Electric substation" means a facility that is:

(i) owned, leased, or otherwise maintained by an electric company regulated by the Maryland Public Service Commission; and

(ii) primarily used to convert, switch, or terminate electric voltages at or above 4,000 volts.

(2) *Inclusions.*

"Electric substation" includes generation facilities used to support the electric distribution system.

(bb) *Electric substation: Indoor*.

"Electric substation: Indoor" means an electric substation the major components of which are housed within a covered building.

(cc) *Electric substation: Outdoor*.

"Electric substation: Outdoor" means an electric substation that is neither an electric substation: enclosed nor an electric substation: indoor.

(Ord. 16-581; Ord. 17-015.)

§ 1-306. "Encroachment" to "Golf course".

(a) *Encroachment.*

"Encroachment" means the placement or extension of any structure or component of a structure into a required yard.

(b) *Entertainment: Indoor.*

(1) *In general.*

"Entertainment: Indoor" means a predominantly spectator use conducted within an enclosed structure, such as a movie theater.

(2) *Inclusions.*

"Entertainment: Indoor" includes the following accessory uses designed and intended primarily for patrons of the facility:

(i) a gift or souvenir shop; and

(ii) a restaurant or refreshment stands.

(3) *Exclusions.*

"Entertainment: Indoor" does not include:

(i) live entertainment; or

(ii) indoor recreation.

(c) *Entertainment: Live.*

(1) *In general.*

"Entertainment: Live" means 1 or more of any of the following, performed live by 1 or more individuals, whether or not done for compensation and whether or not admission is charged:

(i) musical act, including karaoke;

(ii) theatrical act, including a play, revue, or stand-up comedy;

(iii) dance;

(iv) magic act;

(v) disc jockey; or

(vi) similar activity.

(2) *Exclusions.*

"Entertainment: Live" does not include any adult use.

(d) *Environmentally sensitive area.*

"Environmentally sensitive area" means land that contains any of the following natural areas:

(1) streams or stream buffers;

(2) habitats of threatened or endangered species;

(3) forests or forested areas;

(4) wetlands or wetland buffers;

(5) steep slopes (i.e., slopes of 20% or more);

(6) floodplains;

(7) any part of the Chesapeake Bay Critical Area; and

(8) significant or specimen trees.

(e) *Erect.*

"Erect" means:

(1) to construct, reconstruct, or move a structure on a lot; or

(2) to excavate, fill, drain, or conduct physical operations of any kind in preparation for or while undertaking the construction, reconstruction, or moving of a structure on a lot.

(f) *Fairgrounds.*

"Fairgrounds" means an area used variously for one or more of the following, either singularly or in combination with one another:

(1) animal shows;

(2) auctions;

(3) carnivals;

(4) circuses;

(5) concerts;

(6) fairs;

(7) food booths;

(8) games;

(9) rides;

(10) rodeos;

(11) sales; or

(12) similar activities.

(g) *Family.*

(1) *In general.*

"Family" means one of the following, together with customary household helpers:

(i) an individual;

(ii) 2 or more people related by blood, marriage, adoption, or State-supervised foster care, living together as a single housekeeping unit in a dwelling unit; or

(iii) a group of not more than 4 people, who need not be related, living together as a single housekeeping unit in a dwelling unit.

(2) *Roomers included.*

"Family" includes, with respect to those listed in paragraph (1)(i) or (ii) only, up to 2 roomers within the dwelling unit, as long as they share a common entrance and cooking and bathroom facilities.

(3) *Exclusions.*

"Family" does not include, in any case:

(i) more than 4 unrelated people; or

(ii) the occupants of a rooming house, a hotel or motel, or a fraternity or sorority house.

(h) *Financial institution.*

"Financial institution" includes any bank, savings and loan association, credit union, mortgage company, or standalone automated teller machine.

(i) *Fishing pier*.

"Fishing pier" means a fixed or floating platform that extends from the shore over the water and is used for fishing activities.

(j) *Floor area: gross (GFA).*

"Floor area: gross (GFA)" means the sum of the area of all floors of a structure, as measured from the outside faces of the exterior walls or from the centerlines of party walls.

(k) *Floor area ratio (FAR).*

"Floor area ratio (FAR)" means the gross floor area within a structure divided by the area of the lot.

(l) *Food processing: Light.*

"Food processing: Light" means an establishment for preparing, processing, canning, or packaging food and beverage products, where all these activities are within an enclosed structure and create no outside impacts.

(m) *Food shop: Carry-out.*

See "Carry-out food shop".

(n) *Footcandle.*

"Footcandle" means the unit of illumination that equals the illumination at all points 1 foot distant from a uniform light source of 1 candlepower.

(o) *Forest and nature preserve.*

"Forest and nature preserve" means an open space that preserves natural features and protects wildlife and critical environmental features.

(p) *Fraternity or sorority house*.

(1) *In general.*

"Fraternity or sorority house" means a primarily residential structure for the housing of undergraduates of local colleges and universities by members of the same fraternal or sororal organization or association.

(2) *Inclusions.*

"Fraternity or sorority house" includes a structure with shared facilities or separate dwelling units under one roof.

(q) *Freight terminal.*

"Freight terminal" means an establishment for receiving, transferring, or distributing freight for transport by rail, truck, or ship.

(r) *Front lot line.*

See "Lot line: Front".

(s) *Funeral home.*

(1) *In general.*

"Funeral home" means an establishment for preparing deceased individuals for burial or cremation and for conducting rituals before burial or cremation.

(2) *Inclusions.*

"Funeral home" includes:

(i) chapels for viewing a deceased and for conducting rituals; and

(ii) a crematorium.

(t) *Garage.*

See "Parking garage (principal use)".
"Parking garage (residential, detached)".

(u) *Gas station.*

(1) *In general.*

"Gas station" means any premises or structure used for the retail sale of fuel, dispensed from fixed equipment into the fuel tanks of motor vehicles.

(2) *Inclusions.*

"Gas station" includes:

(i) the accessory sale of convenience items; and

(ii) an accessory freestanding self-service car wash.

(v) *Gazebo.*

"Gazebo" means a freestanding outdoor structure that is open-sided in design and not used for habitation.

(w) *General industrial.*

See "Industrial: General".

(x) *Golf course.*

(1) *In general.*

"Golf course" means a tract of land that has holes for playing a game of golf.

(2) *Inclusions.*

"Golf course" includes the following as accessory uses:

(i) a clubhouse;

(ii) a driving range;

(iii) restrooms; and

(iv) shelters.

(Ord. 16-581; Ord. 17-015.)

§ 1-307. "Government facility" to "Industrial boat repair".

(a) *Government facility.*

(1) *In general.*

"Government facility" means a structure or land that is operated by a government agency.

(2) *Inclusions.*

"Government facility" includes agency offices, storage yards, public works facilities, and utility facilities.

(b) *Greenhouse.*

(1) *In general.*

"Greenhouse" means a structure that is:

(i) devoted to the protection or cultivation of flowers or other tender plants; and

(ii) constructed chiefly of glass, glass-like or translucent material, cloth, or lath.

(2) *By any other name.*

"Greenhouse" includes a "high tunnel", "hoop-house", "cold-frame", or similar structure.

(c) *Gross floor area.*

See "Floor area: Gross".

(d) *Gym.*

See "Health center".

(e) *Ham radio equipment.*

See "Amateur (ham) radio equipment".

(f) *Health-care clinic.*

"Health-care clinic" means a facility for the examination and treatment of individuals on an outpatient basis by 1 or more physicians, dentists, chiropractors, physical therapists, or other licensed healthcare practitioners.

(g) *Health center.*

(1) *In general.*

"Health center" means a gym or other facility that:

(i) is designed for physical fitness or weight reduction; and

(ii) contains equipment, such as weight resistance machines, treadmills, stationary bicycles, whirlpools, saunas, showers, and lockers, for that purpose.

(2) *Inclusions.*

"Health center" includes the following accessory uses designed and intended primarily for patrons of the facility:

(i) retail sales; and

(ii) a restaurant or refreshment stands.

(h) *Heavy sales, rental, or service.*

(1) *In general.*

"Heavy sales, rental, or service" means a sales, rental, or service establishment that maintains a service or storage area that is outdoors or in a structure that is only partially enclosed.

(2) *Inclusions.*

"Heavy sales, rental, or service" includes:

(i) large-scale home improvement centers;

(ii) industrial supply stores;

(iii) lumberyards;

(iv) heavy equipment parts, sales and rental; and

(v) playground equipment, sales and rental.

(i) *Heliport*.

(1) *In general*.

"Heliport" means a designated landing area for discharging or picking up passengers or goods by helicopter or similar vertical-lift aircraft.

(2) *Inclusions.*

"Heliport" includes terminal facilities for passengers, goods, aircraft servicing, or storage.

(j) *Helistop.*

"Helistop" means an area of land, water, or structure that is used or intended to be used for the landing and take-off of helicopters or similar vertical-lift aircraft, but without facilities for servicing or basing these aircraft.

(k) *Holiday sales lot.*

See "Seasonal or holiday sales lot".

(l) *Home occupation.*

"Home occupation" means an occupation that:

(1) is carried on in a dwelling unit by a resident of the dwelling unit; and

(2) is secondary to the use of the dwelling unit for residential purposes.

(m) *Homeless shelter.*

(1) *In general.*

"Homeless shelter" means a facility that provides temporary housing to homeless or transient individuals.

(2) *Inclusions.*

"Homeless shelter" includes accessory services such as counseling or vocational training.

(n) *Horse stable.*

"Horse stable" means any structure or land within the City at or from which horses are boarded, bred, sold, or rented for riding, driving, or other purposes.

(o) *Hospital.*

(1) *In general.*

"Hospital" means an institution that provides health services, primarily inpatient medical or surgical care for the sick or injured.

(2) *Inclusions.*

"Hospital" includes related facilities integral to the hospital, such as laboratories, outpatient centers, health-care clinics, helistops, training facilities, classrooms, staff offices, on-site medical waste and storage facilities, and central service facilities.

(p) *Hotel; Motel.*

(1) *"Guest unit" defined.*

In this section, "guest unit" means any room or group of rooms that forms a single habitable unit occupied or designed or intended to be occupied for sleeping or living purposes.

(2) *In general.*

"Hotel" or "motel" means a building that:

(i) is not a dwelling;

(ii) contains 3 or more guest units occupied or designed or intended to be occupied by guests who, even though they might share common areas and facilities, do not form a single housekeeping unit and do not provide compensation under a single lease for occupancy of the facility; and

(iii) offers lodging in these guest units to members of the general public.

(3) *Exclusions.*

"Hotel" or "motel" does not include a bed and breakfast or a rooming house.

(q) *Housing Commissioner; Commissioner of Housing*.

"Housing Commissioner" or "Commissioner of Housing" means the Commissioner of Housing and Community Development or the Commissioner's designee.

(r) *Impervious surface.*

(1) *In general*.

"Impervious surface" means any surface that does not allow stormwater to infiltrate into the ground.

(2) *Inclusions.*

"Impervious surface" includes rooftops, driveways, sidewalks, and pavement.

(3) *Exclusions.*

"Impervious surface" does not include ballasted railroad tracks.

(s) *Incinerator.*

(1) *In general.*

"Incinerator" means a combustion unit that uses controlled flame combustion for the thermal destruction of solid waste, including municipal waste, industrial waste, hazardous waste, special medical waste, or sewage sludge.

(2) *Inclusions.*

"Incinerator" includes any:

(1) infrared incinerator; or

(2) plasma arc incinerator.

(t) *Indoor entertainment.*

See "Entertainment: Indoor".

(u) *Indoor recreation.*

See "Recreation: Indoor".

(v) *Industrial arts studio.*

See "Arts studio: Industrial".

(w) *Industrial boat repair facility.*

(1) *In general.*

"Industrial boat repair facility" means a facility with 5 or more slips (wet or dry) used solely for the manufacture, assembly, or repair of commercial or recreational watercraft.

(2) *Exclusions.*

"Industrial boat repair facility" does not include docking, storage, or sales of recreational watercraft.

(Ord. 16-581; Ord. 17-015.)

§ 1-308. "Industrial: General" to "Lot: Interior".

(a) *Industrial: General.*

(1) *In general.*

"Industrial: General" means the processing, manufacturing, or compounding of materials, products, or energy, having impacts on the environment or significant impacts on the use

and enjoyment of adjacent property in terms of noise, smoke, fumes, odors, glare, or health and safety hazards.

(2) *Inclusions.*

"Industrial: General" includes:

(i) the storage of large volumes of toxic or highly flammable matter or explosives; and

(ii) outdoor operations as part of the processing, manufacturing, or compounding process.

(3) *Exclusions.*

"Industrial: General" does not include or authorize any use prohibited by § 1-218 {"Uses prohibited citywide"} of this title.

(b) *Industrial: Light.*

(1) *In general.*

"Industrial: Light" means the processing, manufacturing, assembly, or compounding of materials or products, where:

(i) all processing, fabrication, assembly, treatment, and packaging of products are contained entirely within a building;

(ii) noise, odor, smoke, heat, glare, and vibration resulting from the manufacturing process are confined within the building or otherwise minimized; and

(iii) only minimal truck traffic is required for daily operations.

(2) *Inclusions.*

"Industrial: Light" includes incidental storage, sales, and distribution of products manufactured or stored on site.

(3) *Exclusions.*

"Industrial: Light" does not include or authorize any use prohibited by § 1-218 {"Uses prohibited citywide"} of this title.

(c) *Industrial: Maritime-dependent.*

(1) *In general.*

"Industrial: Maritime-dependent" means industrial uses with maritime-dependent facilities.

(2) *Inclusions.*

"Industrial: Maritime-dependent" includes:

(i) facilities associated with marine terminals for the storage or intermodal transfer of goods transported in waterborne commerce;

(ii) manufacturing facilities relying on the bulk receipt or shipments of goods by waterborne commerce;

(iii) wharves, piers, docks, and storage facilities for the commercial fishing industry;

(iv) dry docks and other facilities related to the construction, servicing, storage, maintenance, or repair of vessels and other marine structures;

(v) facilities for tow boats, barges, dredges, ferries, commuter boats, water buses, water taxis, or other vessels engaged in waterborne commerce, port operations, or marine construction; and

(vi) facilities that:

(A) are educational in nature, including visitors centers, museums, and interpretive areas, indoor or outdoor; and

(B) are substantially related to an existing industrial maritime-dependent use, whether on the same parcel or an adjacent parcel to that use.

(d) *Interior lot.*

See "Lot: Interior."

(e) *Interior-side lot line.*

See "Lot line: Interior-side."

(f) *Junk or scrap storage and yards.*

(1) *"Processed metal" defined.*

(i) *In general.*

"Processed metal" means scrap metal that has been manually or physically altered either to separate it into distinct materials to enhance economic value or to improve the handling of materials.

(ii) *Inclusions.*

"Processed metal" includes:

(A) scrap metal that has been baled, shredded, sheared, chopped, crushed, flattened, cut, melted, or separated; and

(B) fines, drosses, and related materials that have been agglomerated.

(2) *"Junk or scrap storage and yards" defined.*

"Junk or scrap storage and yards" means any premises used for any 1 or more of the following:

(i) the commercial or industrial storage, temporary or otherwise, of unprocessed metal, processed metal, wastepaper, rags, or other junk;

(ii) the purchase or sale, by weight across an on-site scale, of unprocessed metal, processed metal, wastepaper, rags, or other junk; or

(iii) the sorting, baling, separating, shearing, shredding, or torch preparation of metal or any other form of scrap-metal processing, including automobile flattening and crushing.

(g) *Kennel.*

(1) *In general.*

"Kennel" means a business where 3 or more dogs or cats over 6 months old are boarded or maintained by a person other than their owner.

(2) *Exclusions.*

"Kennel" does not include:

(i) the premises of a feral cat caregiver, as defined in City Health Code § 10-101 {"Animal Control...: Definitons"}, unless 3 or more dogs or non-feral cats over six 6 months old are boarded or maintained on the premises; or

(ii) an animal clinic, unless it engages in the boarding of healthy animals not then being treated or convalescing from treatment in the animal clinic.

(h) *Landfill: Industrial.*

(1) *In general.*

"Landfill: Industrial" means a facility for the disposal of inert, non-hazardous industrial materials that are not biodegradable and are not economically and beneficially reusable at the time of their disposal.

(2) *Exclusions.*

"Landfill: Industrial" does not include a facility for the disposal of:

(i) household, commercial, or municipal solid waste;

(ii) rubble; or

(iii) land-clearing debris.

(i) *Landfill: Solid waste sanitary.*

" Landfill: Solid waste sanitary" means a facility for the disposal of primarily household, commercial, and municipal solid waste.

(j) *Light food processing.*

See "Food processing: Light".

(k) *Light industrial.*

See "Industrial: Light".

(l) *Live entertainment.*

See "Entertainment: Live".

(m) *Lighting: Shielded.*

"Lighting: Shielded" means a fixture that is shielded in a manner so that light rays emitted by the fixture, either directly from the lamp or indirectly from the fixture or a reflector, are projected below a horizontal plane running through the lowest point on the fixture where light is emitted.

(n) *Lighting: Unshielded.*

"Lighting: Unshielded" means a fixture that allows light, either directly from the lamp or indirectly from the fixture or a reflector, to be emitted above the horizontal plane running through the lowest point on the fixture where light is emitted.

(o) *Live-work dwelling.*

See "Dwelling: Live-Work".

(p) *Loading berth.*

"Loading berth" means a space within a loading facility that:

(1) is exclusively for the temporary parking of a commercial vehicle while loading or unloading goods or materials; and

(2) adjoins a street, alley, or other appropriate means of access.

(q) *Lodge or social club.*

(1) *In general.*

"Lodge or social club" means a lodge or social club that:

(i) has a limited membership, with members elected pursuant to its charter or bylaws;

(ii) excludes the general public from its premises or place of meeting;

(iii) is organized with officers and directors elected pursuant to its charter or bylaws; and

(iv) holds all property for the common benefit of its members.

(2) *Inclusions.*

"Lodge or social club" includes:

(i) a union hall; and

(ii) a non-residential post-baccalaureate fraternity and sorority center.

(3) *Exclusions.*

"Lodge or social club" does not include an establishment that permits non-members to pay a temporary membership fee at the door in order to enter and use the premises.

(r) *Lot.*

"Lot" means a portion of land that:

(1) is a lot of record; or

(2) has been established as a lot by an approved subdivision plat.

(s) *Lot area.*

"Lot area" means the area of a horizontal plane bounded by lot lines at grade.

(t) *Lot: Corner.*

"Lot: Corner" means a lot that is situated at the junction of and adjoins 2 or more intersecting streets.

(u) *Lot coverage.*

"Lot coverage" means the portion of a lot that is occupied by buildings or other structures, including accessory structures, expressed as a percentage of total lot area.

(v) *Lot: Interior.*

"Lot: Interior" means a lot that is neither a corner lot nor a through lot.
(Ord. 16-581; Ord. 17-015.)

§ 1-309. "Lot line" to "Motel".

(a) *Lot line; Property line.*

"Lot line" or "property line" means the line bounding a lot.

(b) *Lot line: Corner-side.*

"Lot line: Corner-side" means the lot line that:

(1) is not a front lot line; and

(2) coincides with:

(i) the right-of-way line of an existing or dedicated public street; or

(ii) where no public street exists, the right-of-way line of a public or private way.

(c) *Lot line: Front.*

"Lot line: Front" means the lot line that coincides with:

(1) the right-of-way line of an existing or dedicated public street from which the property derives its address; or

(2) where no public street exists, the right-of-way line of a public or private way from which the property derives its address.

(d) *Lot line: Interior-side.*

"Lot line: Interior-side" means a lot line that does not adjoin a street and is not a rear lot line.

(e) *Lot line: Rear.*

"Lot line: Rear" means the lot line that is most distant from and opposite the front lot line.

(f) *Lot line: Side.*

(1) *In general.*

"Lot line: Side" means a lot line that is neither a front lot line nor a rear lot line.

(2) *Inclusions.*

"Lot line: Side" includes an interior-side lot line and a corner-side lot line.

(g) *Lot: Through.*

"Lot: Through" means a lot that extends between 2 streets (but not alleys) with vehicular access on both streets.

(h) *Lot width.*

"Lot width" means the horizontal distance between side lot lines, as measured along the front lot line.

(h-1) *Lounge*.

(1) *In general*.

"Lounge" means a business establishment that:

(i) is open to the general public;

(ii) is designed or operated primarily to accommodate social gatherings; and

(iii) does not serve or permit the on-site consumption of alcohol.

(2) *Exclusions*.

"Lounge" does not include any of the following uses:

(i) adult use;

(ii) banquet hall;

(iii) carry-out food shop;

(iv) entertainment: indoor;

(v) entertainment: live;

(vi) lodge or social club; or

(vii) restaurant.

(i) *Luminaire.*

"Luminaire" means a complete lighting unit that extends from a support structure, parallel to the ground, and consists of a light source and all necessary mechanical, electrical, and decorative parts.

(j) *Marina.*

"Marina" means any facility designed to moor, berth, launch, or store 5 or more watercraft, whether as a principal use or an accessory use.

(k) *Marina: Accessory.*

"Marina: Accessory" means a marina that is used exclusively for the benefit of the occupants of properties within 300 feet of a marina entrance.

(l) *Marina: Dry storage.*

"Marina: Dry storage" means a marina that provides for the long-term dry storage of recreational watercraft in racks or other storage systems.

(m) *Marina: Recreational.*

"Marina: Recreational" means a facility that provides for the lease or purchase of 5 or more in-water moorings, wet slips, or dry docking for recreational watercraft.

(n) *Marina entrance.*

"Marina entrance" means the point at which pedestrian access is provided from land to marina docks.

(o) *Marine terminal.*

"Marine terminal" means that part of a port or harbor with facilities for docking, cargo-handling, and storage.

(p) *Maritime-dependent industrial.*

See "Industrial: Maritime-dependent".

(q) *Master Plan.*

See "Comprehensive Master Plan".

(r) *Materials recovery facility.*

(1) *In general.*

"Materials recovery facility" means, except as provided in paragraph (2) of this subsection, a facility that:

(i) collects, sorts, grades, or processes solid waste to remove recyclable and reusable materials such as paper, cans, aluminum scrap, metal, glass, and plastics; or

(ii) processes solid waste to alter its volume or its chemical or physical characteristics to produce a marketable product.

(2) *Exclusions.*

"Materials recovery facility" does not include:

(i) any facility that is licensed by the State or City as a junk dealer, scrap-metal processor, or scrap-metal dealer; or

(ii) any junk or scrap storage and yard.

(s) *Medical clinic.*

See "Health-care clinic".

(t) *Memorial plaque.*

"Memorial plaque" means a sign, tablet, or plaque that memorializes a person, event, structure, or site.

(u) *Mini-warehouse.*

(1) *In general.*

"Mini-warehouse" means a facility in which:

(i) renters store and control personal property in individual storage spaces; and

(ii) no commercial transactions are conducted, other than the rental of storage units.

(2) *Inclusions.*

"Mini-warehouse" includes accessory outdoor storage and retail sales of packing, moving, and storage supplies.

(v) *Motel.*

See "Hotel; motel".

(Ord. 16-581; Ord. 17-015; 17-056.)

§ 1-310. "Motor vehicle" to "Owner".

(a) *Motor vehicle.*

"Motor vehicle" means:

(1) a motor vehicle, as defined in §11-135 {"Motor vehicle"} of the Maryland Vehicle Law;

(2) a moped, as defined in §11-134.1 {"Moped"} of the Maryland Vehicle Law; and

(3) a motor scooter, as defined in §11-134.5 {"Motor scooter"} of the Maryland Vehicle Law.

(b) *Motor vehicle dealership.*

(1) *In general.*

"Motor vehicle dealership" means an establishment that sells or leases new or used motor vehicles.

(2) *Inclusions.*

"Motor vehicle dealership" includes:

(i) the maintenance, either on-site or at a nearby location, of an inventory of motor vehicles held for sale or lease; and

(ii) on-site facilities for the repair and service of vehicles sold or leased by the dealership.

(c) *Motor vehicle operations facility.*

(1) *In general.*

"Motor vehicle operations facility" means a privately-owned facility for the dispatch, storage, fueling, and maintenance of emergency medical care vehicles, public utility vehicles, taxicabs, and other livery vehicles.

(2) *Exclusions.*

"Motor vehicle operations facility" does not include a facility in which vehicles for fire, police, or other municipal agencies are stored or maintained or from which these vehicles are dispatched.

(d) *Motor vehicle rental establishment.*

(1) *In general.*

"Motor vehicle rental establishment" means an establishment that rents motor vehicles.

(2) *Inclusions.*

"Motor vehicle rental establishment" includes facilities for servicing rental vehicles.

(e) *Motor vehicle service and repair: Major.*

(1) *In general.*

"Motor vehicle service and repair: Major" means an establishment that is engaged in major repairs to motor vehicles, such as:

(i) engine rebuilding;

(ii) major reconditioning of worn or damaged motor vehicles or trailers;

(iii) towing services;

(iv) collision services, including body, frame, or fender repair or straightening; or

(v) painting.

(2) *Inclusions.*

"Motor vehicle service and repair: Major" includes an accessory car wash.

(f) *Motor vehicle service and repair: Minor.*

(1) *In general.*

"Motor vehicle service and repair: Minor" means an establishment that is engaged in minor repairs to motor vehicles, such as:

(i) repair or replacement of cooling, electrical, fuel, and exhaust systems;

(ii) brake adjustments, relining, and repairs;

(iii) wheel alignment, balancing, and servicing;

(iv) repair and replacement of shock absorbers; and

(v) replacement or adjustment of mufflers, tail pipes, hoses, belts, light bulbs, fuses, windshield wipers, grease retainers, and wheel bearings.

(2) *Inclusions.*

"Motor vehicle service and repair: Minor" includes an accessory car wash.

(3) *Exclusions.*

"Motor vehicle service and repair: Minor" does not include the servicing or repair of commercial vehicles.

(g) *Movie studio.*

(1) *In general.*

"Movie studio" means facilities for the production of motion pictures.

(2) *Inclusions.*

"Movie studio" includes stages, exterior sets, film laboratories, sound recording facilities, construction, repair, and storage facilities, caretaker's and other temporary dwellings, related commercial vehicles, and accessory fabrication activities.

(h) *Multi-family dwelling.*

See "Dwelling: Multi-family".

(i) *Multi-family dwelling (Age-restricted).*

See "Age-restricted multi-family dwelling".

(j) *Neighborhood commercial establishment.*

"Neighborhood commercial establishment" means a non-residential use that is within a residential or office-residential zoning district, but in a structure that is non-residential in its construction and original use.

(k) *Nonconforming lot.*

"Nonconforming lot" has the meaning stated in § 18-201 {"Nonconformities: Definitions"} of this Code.

(l) *Nonconforming structure.*

"Nonconforming structure" has the meaning stated in § 18-201 {"Nonconformities: Definitions"} of this Code.

(m) *Nonconforming use.*

"Nonconforming use" has the meaning stated in § 18-201 {"Nonconformities: Definitions"} of this Code.

(n) *Nursery.*

(1) *In general.*

"Nursery" means a business whose principal activity is the sale of plants grown on site.

(2) *Inclusions.*

"Nursery" includes:

(i) outside storage, growing, or display; and

(ii) a greenhouse.

(o) *Office.*

(1) *In general.*

"Office" means an establishment that engages in the processing, manipulation, or application of business information or professional expertise, whether or not it offers services to the public.

(2) *Exclusions.*

"Office" does not include fabricating, assembling, repairing, or warehousing physical products for the retail or wholesale market.

(p) *Off-street parking.*

See "Parking: Off-street".

(q) *On-street parking.*

See "Parking: On-street".

(r) *Outdoor dining.*

"Outdoor dining" means an outdoor seating area that adjoins a restaurant or carry-out food shop and is used by patrons to consume food or drinks.

(s) *Outdoor sales and display.*

"Outdoor sales and display" means the outdoor sale or display of goods on part of a lot as an accessory to the principal use of the lot.

(t) *Outdoor recreation.*

See "Recreation: Outdoor".

(u) *Outdoor storage.*

(1) *In general.*

"Outdoor storage" means any storage of goods, material, merchandise, or equipment other than within an enclosed building.

(2) *Inclusions.*

"Outdoor storage" includes incidental maintenance and repair of that which is being stored.

(v) *Outdoor storage yard.*

(1) *In general.*

"Outdoor storage yard" means a lot the principal or accessory use of which is the storage, other than within an enclosed building, of any material for longer than 24 hours.

(2) *Inclusions.*

"Outdoor storage yard" includes all storage, whether for sale, lease, processing, or repair.

(w) *Owner.*

(1) *In general.*

"Owner" means any person that:

(i) has a legal or equitable interest in the property;

(ii) is recorded in the land records as holding title to the property; or

(iii) otherwise has control of the property, with or without accompanying possession of the property.

(2) *Inclusions.*

"Owner" includes:

(i) a guardian of the person or property of an owner;

(ii) a trustee of an owner's property, including a trustee in bankruptcy; or

(iii) a personal representative of an owner's estate.

(Ord. 16-581; Ord. 17-015.)

§ 1-311. "Parapet" to "Processed metal".

(a) *Parapet.*

"Parapet" means the extension of a false front or wall above a roof-line.

(b) *Parking.*

"Parking" means the parking, storage, housing, or keeping of a motor vehicle, whether self-service or valet-service, long-term or short-term, ticketed or metered, for special events only, or otherwise.

(c) *Parking garage (principal use).*

"Parking garage (principal use)" means a structure the principal use of which is to provide off-street parking for motor vehicles, whether for compensation or not.

(d) *Parking garage (residential, detached).*

"Parking garage (residential, detached)" means a structure, adjacent to but detached from a dwelling, for the off-street parking of motor vehicles, with no commercial operations.

(e) *Parking lot.*

"Parking lot" means an open area the principal use of which is to provide off-street parking for operable motor vehicles, whether for compensation or not.

(f) *Parking: Off-street.*

"Parking: Off-street" means parking spaces for motor vehicles on premises other than a street or other right-of way.

(g) *Parking: On-street.*

"Parking: On-street" means parking spaces for motor vehicles located on a street or other right-of-way.

(h) *Parking space.*

"Parking space" means a designated area, whether open or enclosed, that is used for the parking of a motor vehicle.

(i) *Park; Playground.*

(1) *In general.*

"Park" or "playground" means a non-commercial facility that serves the reflective and recreational needs of residents and visitors.

(2) *Inclusions.*

"Park" or "playground" includes:

(i) ball fields and basketball courts;

(ii) exercise stations;

(iii) skateboarding areas;

(iv) pet areas;

(v) hiking and biking trails;

(vi) stream and lake areas;

(vii) forest and meadowland areas;

(viii) reflective, historical, cultural, and educational areas; and

(ix) structures that have indoor recreation facilities.

(j) *Party wall.*

"Party wall" means a wall that:

(1) extends from the foundation continuously through all stories to or above the roof;

(2) separates 1 building from another; and

(3) is in joint use by each building.

(k) *Passenger terminal.*

(1) *In general.*

"Passenger terminal" means a facility or location the principal use of which is handling, receiving, and transferring passenger traffic.

(2) *Inclusions.*

"Passenger terminal" includes terminals for aircraft, train, bus, and watercraft passengers.

(l) *Pawn shop.*

"Pawn shop" means a business that:

(1) lends money on the deposit or pledge of personal property or other items of value, other than securities or printed evidences of indebtedness; or

(2) purchases personal property or other items of value, subject to the seller's option to buy them back at a stipulated price.

(m) *Permitted use.*

See "Use: Permitted"

(n) *Person.*

"Person" means:

(1) an individual;

(2) a partnership, firm, association, corporation, or other entity of any kind;

(3) a receiver, trustee, guardian, personal representative, fiduciary, or representative of any kind; and

(4) except as used in Title 19, Subtitle 2 {"Enforcement"} of this Code for the imposition of civil or criminal penalties, a governmental entity or an instrumentality or unit of a governmental entity.

(o) *Personal services establishment.*

(1) *In general.*

"Personal services establishment" means an establishment that provides recurrent needed services of a personal nature.

(2) *Illustrations.*

Typical examples of a "personal services establishment" include:

(i) beauty shops and barbershops;

(ii) tanning salons;

(iii) animal grooming establishments;

(iv) electronics repair shops;

(v) laundromats, dry cleaners, and tailors; and

(vi) certified massage therapists or similar licensed professionals.

(p) *Place of worship.*

(1) *In general.*

"Place of worship" means a building, together with its accessory buildings and uses, where individuals regularly assemble for religious purposes and related social events.

(2) *Inclusions.*

"Place of worship" includes:

(i) group housing for individuals under religious vows or in religious orders; and

(ii) accessory programs that provide care for children or for elderly or functionally impaired adults.

(q) *Planning Director; Director of Planning*.

"Planning Director" or "Director of Planning" means the Director of the Department of Planning, as appointed under City Charter Article VII, § 73, or the Director's designee.

(r) *Playground.*

See "Park; Playground".

(s) *Porch.*

"Porch" means a structure that projects from the exterior wall of a building, has direct access to the street level of the building, and may be covered by a roof or eaves.

(t) *Principal building.*

See "Building: Principal".

(u) *Principal use.*

See "Use: Principal".

(v) *Printing establishment.*

(1) *In general.*

"Printing establishment" means a facility for the reproduction of written or graphic materials on a custom-order basis for individuals or businesses.

(2) *Illustrations.*

Typical examples of a "printing establishment" include:

(i) photocopying;

(ii) blueprinting;

(iii) offset printing; and

(iv) facsimile sending and receiving.

(w) *Private pier.*

"Private pier" means facilities with 4 or fewer slips, used exclusively for private, recreational purposes by the owner and the owner's guests.

(x) *Processed metal.*

See "Junk or scrap storage and yards".

(Ord. 16-581; Ord. 17-015.)

§ 1-312. "Property line" to "Roof deck".

(a) *Property line.*

See "Lot line".

(b) *Public use area (off-street parking requirements).*

(1) *In general.*

"Public use area", as it applies to the calculation of off-street parking requirements, means areas within a structure that are accessible to the public.

(2) *Illustrations.*

"Public use area" includes areas such as display areas, restrooms, dining rooms, and bar seating.

(c) *Racetrack.*

(1) *In general.*

"Racetrack" means a measured course where animals or automobiles are entered in competition against one another or against time.

(2) *Inclusions.*

"Racetrack" includes:

(i) tracks used only for training purposes; and

(ii) the following accessory uses designed and intended primarily for patrons of the facility:

(A) a gift or souvenir shop; and

(B) a restaurant or refreshment stands.

(d) *Rear lot line.*

See "Lot line: Rear".

(e) *Recreation: Indoor.*

(1) *In general.*

"Recreation: Indoor" means predominantly participant recreational activities or games of skill that are conducted within a wholly enclosed building.

(2) *Inclusions.*

"Recreation: Indoor" includes:

(i) bowling alleys, pool halls, indoor miniature golf courses, indoor child's play facilities, amusement arcades, indoor tennis courts, indoor swimming pools, and other similar facilities; and

(ii) the following accessory uses designed and intended primarily for patrons of the facility:

(A) a gift or souvenir shop; and

(B) a restaurant or refreshment stands.

(3) *Exclusions.*

"Recreation: Indoor" does not include indoor entertainment.

(f) *Recreation: Outdoor.*

(1) *In general.*

"Recreation: Outdoor" means predominantly participant recreational activities or games of skill that are not conducted within a wholly enclosed building.

(2) *Inclusions.*

"Recreation: Outdoor" includes:

(i) miniature golf courses, swimming pools, tennis courts, ball fields, skateboard parks, and other similar facilities; and

(ii) the following accessory uses designed and intended primarily for patrons of the facility:

(A) a gift or souvenir shop; and

(B) a restaurant or refreshment stands.

(3) *Exclusions.*

"Recreation: Outdoor" does not include:

(i) parks or playgrounds;

(ii) golf courses or driving ranges; or

(iii) outdoor entertainment.

(g) *Recreational boat launch.*

"Recreational boat launch" means a designated area at which:

(1) recreational watercraft may be launched; or

(2) transient watercraft may tie up, be launched, or have repairs made for less than 1 week at a time.

(h) *Recreational marina.*

See "Marina: Recreational".

(i) *Recreational vehicle.*

(1) *In general.*

"Recreational vehicle" means a vehicle that:

(i) is designed or intended as a temporary dwelling for travel, recreational, or vacation use; and

(ii) is self-propelled or mounted on or pulled by another vehicle.

(2) *Inclusions.*

"Recreational vehicle" includes a travel trailer, camping trailer, truck camper, motor home, fifth-wheel trailer, boat, or van.

(j) *Recreational vehicle dealership.*

(1) *In general.*

"Recreational vehicle dealership" means an establishment that sells or leases new or used recreational vehicles.

(2) *Inclusions.*

"Recreational vehicle dealership" includes:

(i) the maintenance, either on-site or at a nearby location, of an inventory of vehicles held for sale or lease; and

(ii) on-site facilities for the repair and service of vehicles sold or leased by the dealership.

(k) *Recyclable materials.*

(1) *In general.*

"Recyclable materials" means materials that can be collected, separated, or processed and returned to the marketplace in the form of raw materials or products.

(2) *Inclusions.*

"Recyclable materials" includes paper, cans, aluminum, metal, glass, and plastics.

(l) *Recyclable materials recovery facility.*

(1) *In general.*

(i) "Recyclable materials recovery facility" means, except as provided in paragraph (2) of this subsection, a facility that collects, sorts, grades, or processes recyclable, source-separated material.

(ii) Processing at these facilities is limited to pressing, crushing, cutting, baling, and other preparations of materials for shipping.

(2) *Exclusions.*

"Recyclable materials recovery facility" does not include:

(i) any facility that is licensed by the State or City as a junk dealer, scrap metal processor, or scrap metal dealer; or

(ii) any junk or scrap storage and yard.

(m) *Recycling.*

(1) *In general.*

"Recycling" mean any process by which materials that would otherwise become solid waste are collected, separated, or processed and returned to the marketplace in the form of raw materials or products.

(2) *Inclusions.*

"Recycling" includes composting.

(n) *Recycling and refuse collection facility.*

(1) *In general.*

"Recycling and refuse collection facility" means a facility the primary purpose of which is:

(i) the collection, storage, and transference of solid waste and yard waste; and

(ii) the collection, storage, processing, and transference of recyclables.

(2) *Exclusions.*

"Recycling and refuse collection facility" does not include any:

(i) incinerator;

(ii) junk or scrap storage and yard;

(iii) sewage treatment facility;

(iv) solid waste sanitary landfill; or

(v) vehicle dismantling facility.

(o) *Research and development facility.*

(1) *In general.*

"Research and development facility" means an establishment where research and development activities are conducted in various disciplines, including biotechnology, pharmaceuticals, medical instrumentation or supplies, communication and information technology, electronics and instrumentation, and computer hardware and software.

(2) *Exclusions.*

"Research and development facility" does not include the manufacture, fabrication, processing, or sale of products.

(p) *Residential-care facility.*

"Residential-care facility" means a group care or similar facility for the 24-hour medical or non-medical care of individuals in need of personal services, supervision, or assistance essential to sustain activities of daily living, or to protect the individual.

(q) *Residential-care facility (Age-restricted).*

See "Age-restricted residential-care facility".

(r) *Resource recovery facility.*

(1) *In general.*

"Resource recovery facility" means, except as provided in paragraph (2) of this subsection, a facility that:

(i) processes solid waste to produce valuable resources, such as steam, electricity, or refuse-derived fuel; and

(ii) achieves a volume reduction of at least 50% of the waste that is being processed.

(2) *Exclusions.*

"Resource recovery facility" does not include:

(i) any facility that processes hazardous materials;

(ii) any facility that is licensed by the State or City as a junk dealer, scrap metal processor, or scrap metal dealer; or

(iii) any junk or scrap storage and yard.

(s) *Restaurant.*

(1) *In general.*

"Restaurant" means an establishment at which:

(i) food and drinks are provided to the public, primarily for on-premises consumption by seated patrons; and

(ii) if the establishment also serves alcoholic beverages:

(A) a full menu of food and drinks is prepared primarily on premises; and

(B) annually, the average daily receipts from the sale of food exceeds 50% of the establishment's total average daily receipts, not including sales of novelty items, income from vending machines, cover charges, or other receipts not derived from the sale of food or beverages.

(2) *Exclusions.*

"Restaurant" does not include a carry-out food shop.

(t) *Retail: Big Box Establishment.*

"Retail: Big Box Establishment" means any single-use commercial building, whether stand-alone or within a multi-building development, which single-use building occupies at least 75,000 square feet of gross floor area.

(u) *Retail goods establishment.*

(1) *In general.*

"Retail goods establishment" means an establishment that sells goods, wares, or other merchandise directly to consumers.

(2) *Inclusions.*

"Retail goods establishment", as applied to a delicatessen, bakery, grocery, or similar establishment that sells ready-to-eat food products, includes incidental seating areas for consumption of food on the premises.

(3) *Exclusions.*

"Retail goods establishment" does not include any heavy sales, rental, or service establishment.

(v) *Right-of-way.*

(1) *In general.*

"Right-of-way" means land dedicated for use as a public way.

(2) *Inclusions.*

"Right-of-way" includes the roadway and, generally, the curbs, parkways, sidewalks, lighting facilities, and drainage facilities.

(w) *Roof deck.*

"Roof deck" means a roofless outdoor platform that is constructed on the roof of a structure and connected to the roof by structural supports.

(Ord. 16-581; Ord. 17-015.)

§ 1-313. "Roofline" to "Substantial construction".

(a) *Roofline.*

"Roofline" means the top edge of a roof or building parapet, whichever is higher, excluding any cupolas, pylons, chimneys, or minor projections.

(b) *Rooming house.*

(1) *"Rooming unit" defined.*

In this section, "rooming unit" means any room or group of rooms that forms a single habitable unit occupied or designed or intended to be occupied for sleeping or living purposes, but not for cooking purposes.

(2) *In general.*

"Rooming house" means a building that:

(i) is not a dwelling;

(ii) contains 3 or more rooming units occupied or designed or intended to be occupied as a primary residence by individuals who, even though they do share common areas and facilities, do not form a single housekeeping unit and do not provide compensation under a single lease for occupancy of the facility; and

(iii) provides shared facilities such as a kitchen and bath.

(c) *Rowhouse.*

See "Dwelling: Rowhouse".

(d) *Satellite dish antenna.*

"Satellite dish antenna" means a dish antenna for transmitting signals to a receiver or receiving station or for receiving television, radio, data, communication, or other signals from satellites or from other antennas or services.

(e) *Seasonal or holiday sales lot.*

"Seasonal or holiday sales lot" means a temporary retail sales operation, generally conducted outdoors, that offers for sale seasonal or holiday related items, such as Christmas trees and pumpkins.

(f) *Semi-detached dwelling.*

See "Dwelling: Semi-detached".

(g) *Shielded lighting.*

See "Lighting: Shielded".

(h) *Shipyard.*

"Shipyard" means any facility or area that is designed or used for the manufacture, assembly, or repair of ships, barges, or boats.

(i) *Side lot line.*

See "Lot line: Side".

(j) *Sign.*

(1) *In general.*

"Sign" means any writing (including letter, word, or numeral), pictorial representation (including illustration or graphic), emblem (including logo, symbol, or trademark), flag (including banner or pennant), device, or any other figure of similar character that:

(i) is attached to, painted on, or in any other way represented on a structure, in or on a window (including anything affixed to the interior and displayed within 12 inches of a window), or on the ground;

(ii) is used to announce, direct attention, or advertise; and

(iii) is visible from outside a structure.

(2) *Exclusions.*

"Sign" does not include murals or other art that contains no commercial message.

(3) *Types of signs.*

The specific types of signs are as described in § 17-102 {"Sign Regulations: Definitions"} of this Code.

(k) *Significant development.*

"Significant development", as it applies to the Chesapeake Bay Critical Area, has the meaning stated in § 7-402 {"CBCA Overlay: Definitions"} of this Code.

(l) *Social club.*

See "Lodge or social club".

(m) *Solid waste sanitary landfill*.

See "Landfill: Solid waste sanitary".

(n) *Special exception.*

See "Use: Conditional".

(o) *Stadium.*

(1) *In general.*

"Stadium" means a structure with tiers of seats rising around a field or court, intended to be used:

(i) primarily for the viewing of athletic events; and

(ii) secondarily, for entertainment and other public gathering purposes, such as conventions, circuses, or concerts.

(2) *Inclusions.*

"Stadium" includes the following accessory uses designed and intended primarily for patrons of the facility:

(i) a gift or souvenir shop; and

(ii) a restaurant or refreshment stands.

(p) *Stacking space.*

"Stacking space" means a space specifically designated as a waiting area for vehicles patronizing a drive-through establishment.

(q) *Stormwater.*

"Stormwater" means the water running off the surface of a drainage area during and immediately following rain or as a result of other precipitation.

(r) *Story.*

"Story" means that portion of a building, other than a basement, that is:

(1) included between the surface of any floor and the surface of the floor next above it; or

(2) if there is no floor above it, then the space between the floor and the ceiling next above it.

(s) *Street.*

"Street" means any street, boulevard, road, highway, alley, lane, sidewalk, footway, or other way that is owned by the city or habitually used by the public.

(t) *Structural alteration.*

"Structural alteration" means:

(1) a change in the permanent physical members of a structure, such as bearing walls, columns, beams, or girders; or

(2) any substantial change in the roof or in the exterior walls.

(u) *Structure.*

(1) *In general.*

"Structure" means all or any part of anything erected that:

(i) has a fixed location on the ground; or

(ii) is attached to something having a fixed location on the ground.

(2) *Inclusions.*

"Structure" includes any building, fence, wall, sign, or tower.

(v) *Structure: Accessory.*

See "Accessory structure".

(w) *Substantial construction.*

"Substantial construction" means:

(1) for new construction, that construction materials have been placed in permanent positions or fastened in a permanent manner; or

(2) in preparation for rebuilding, that excavation, demolition, or removal of an existing structure has been substantially begun and is carried on diligently.

(Ord. 16-581.)

§ 1-314. "Tavern" to "Wholesale Goods".

(a) *Tavern.*

"Tavern" means a business establishment that:

(1) is devoted primarily to serving alcoholic beverages to the public for on-premises consumption; and

(2) might or might not also:

(i) serve food; and

(ii) sell alcoholic beverages for off-premises consumption.

(b) *Through lot.*

See "Lot: Through".

(c) *Transparency (of facade).*

"Transparency", when used in reference to a building's facade, means the percentage of the facade that consists of glass.

(d) *Truck repair.*

(1) *In general.*

"Truck repair" means an establishment that is engaged in the repair and servicing of trucks.

(2) *"Truck" defined.*

In this subsection, "truck" means a commercial vehicle of more than 10,000 pounds gross vehicle weight.

(e) *Truck stop.*

(1) *In general.*

"Truck stop" means a facility primarily for the retail sale of fuel for commercial vehicles.

(2) *Inclusions.*

"Truck stop" includes:

(i) incidental repair or servicing of commercial vehicles; and

(ii) facilities for parking and for drivers to eat and rest.

(f) *Truck terminal.*

"Truck terminal" means a facility primarily:

(1) to accommodate the transfer of goods to trucks, truck trailers, or other vehicles; or

(2) to accommodate the parking or storage of commercial vehicles or trailers.

(g) *Unshielded lighting.*

See "Lighting: Unshielded".

(h) *Urban agriculture.*

(1) *In general.*

"Urban agriculture" means the cultivation, processing, and marketing of food, with a primary emphasis on operating as a business enterprise.

(2) *Inclusions*.

(i) "Urban agriculture" includes:

(A) animal husbandry;

(B) aquaculture;

(C) agro-forestry;

(D) vineyards and wineries; and

(E) horticulture.

(ii) "Urban agriculture" might involve the use of:

(A) intensive production methods;

(B) structures for extended growing seasons;

(C) on-site sale of produce; and

(D) composting.

(i) *Use.*

"Use" means:

(1) any purpose for which land or a structure is used, occupied, or intended to be used or occupied; and

(2) any activity, occupation, business, or operation that is carried out on land or in a structure.

(j) *Use: Accessory.*

See "Accessory use".

(k) *Use: Conditional.*

"Use: Conditional" means a use that:

(1) may be authorized by the Board of Municipal and Zoning Appeals or, if required by this Code, by Ordinance of the Mayor and City Council as a special exception under the State Land Use Article; and

(2) is subject to review and approval by the Board of Municipal and Zoning Appeals or by the Mayor and City Council, as the case may be, and the imposition of conditions or restrictions under this Code.

(l) *Use: Permitted.*

"Use: Permitted" means a use allowed in a zoning district without the need for special administrative review and approval, as long as it conforms to all the applicable requirements and standards of this Code.

(m) *Use: Principal.*

"Use: Principal" means the main use of land or a structure, as distinguished from an accessory use.

(n) *Utilities.*

"Utilities" includes:

(1) natural gas lines, power lines, alternative energy systems, steamlines, telephone lines, cable television lines, fiber optic lines, and other communication lines;

(2) above ground private utility structures, such as pedestals for cable wire access or other access points for underground infrastructure (communications wiring or fiber optic);

(3) appurtenances and components of these; and

(4) the operation, maintenance, repair, and replacement of these.

(o) *Vehicle dismantling facility.*

(1) *In general.*

"Vehicle dismantling facility" means an establishment for the buying, selling, trading, storing, or otherwise dealing in vehicles for the purpose of dismantling the vehicles and buying, selling, storing, or trading their integral parts or component materials.

(2) *Inclusions.*

"Vehicle dismantling facility" includes pull-or-pick-apart facilities, salvage pools, salvage auctions, and businesses and individuals that handle salvage vehicles.

(p) *Video lottery facility.*

(1) *In general.*

"Video lottery facility" means a facility that has been awarded a Video Lottery Operation License by the Maryland Video Lottery Location Commission under State Government Article, Title 9, Subtitle 1A.

(2) *Inclusions.*

"Video lottery facility" includes:

(i) the permitted number of video lottery terminals;

(ii) associated food and beverage operations;

(iii) associated live entertainment and dancing; and

(iv) associated parking facilities located on adjacent lots.

(q) *Vocational school.*

See "Educational facility: Commercial-vocational".

(r) *Warehouse.*

"Warehouse" means a facility for the storage and distribution of products, supplies, and equipment.

(s) *Water-dependent facilities.*

"Water-dependent facilities", as it applies to the Chesapeake Bay Critical Area, has the meaning stated in § 7-402 {"CBCA Overlay: Definitions"} of this Code.

(t) *Waterfreight terminal.*

(1) *In general.*

"Waterfreight terminal" means a facility used for waterborne commodities.

(2) *Inclusions.*

"Waterfreight terminal" includes docks, piers, wharves, storage sheds, and rail and truck facilities that service or relate to, a waterfreight terminal.

(u) *Wholesale goods establishment.*

(1) *In general.*

"Wholesale goods establishment" means a facility primarily engaged in:

(i) selling or distributing merchandise to retailers, to industrial, commercial, institutional, or professional business users, or to other wholesalers; or

(ii) acting as an agent or broker and buying merchandise for, or selling merchandise to, businesses of the sort listed.

(2) *Inclusions.*

"Wholesale goods establishment" includes the following accessory uses:

(i) a showroom for the display of items stored on-site; and

(ii) retail sales to the public.

(Ord. 16-581; Ord. 17-015.)

§ 1-315. "Yard" to "Zoo".

(a) *Yard (Required).*

"Yard", when used with respect to required yards, means the space between a building and the adjoining lot lines that, except as otherwise permitted by this Code, is unoccupied, open, and unobstructed by any part of a structure from the ground to the sky.

(b) *Yard: Corner-side (Required).*

"Yard: Corner-side", when used with respect to required yards, means the yard that extends along the corner-side lot line between the front yard and the rear lot line for the required minimum depth, as specified for the district in which the lot is located, measured perpendicular to the corner-side lot line.

(c) *Yard: Front (Required).*

"Yard: Front", when used with respect to required yards, means the yard that extends the full width of the lot between side lot lines for the required minimum depth, as specified by the zoning district in which the lot is located, measured perpendicular to the front lot line.

(d) *Yard: Interior-side (Required).*

"Yard: Interior-side", when used with respect to required yards, means the yard that extends along an interior-side lot line, between the front and rear yards, for the required minimum depth, as specified for the district in which the lot is located, measured perpendicular to the interior-side lot line.

(e) *Yard: Rear (Required).*

"Yard: Rear", when used with respect to required yards, means the yard that extends between the side lot lines for the required minimum depth, as specified by the zoning district in which the lot is located, measured perpendicular to the rear lot line.

(f) *Zoning Administrator; Administrator*.

"Zoning Administrator" or "Administrator" means the executive head of the Office of Zoning Administrator, as established under § 3-201 {"Zoning Administrator"} of this Code, or the Administrator's designee.

(g) *Zoning Board; BMZA.*

"Zoning Board" or "BMZA" means the Board of Municipal and Zoning Appeals, as established in City Charter Article VII, § 82.

(h) *Zoo.*

(1) *In general.*

"Zoo" means a facility in which animals are exhibited or displayed to the public.

(2) *Inclusions.*

"Zoo" includes the following accessory uses designed and intended primarily for patrons of the facility:

(i) a gift or souvenir shop; and

(ii) a restaurant or refreshment stands.

(Ord. 16-581; Ord. 17-015.)

{PAGE LEFT INTENTIONALLY BLANK}

TITLE 2
PURPOSE, APPLICABILITY, SHORT TITLE

SUBTITLE 1
PURPOSE OF CODE

§ 2-101. Purpose of Code.

This Code is intended to serve the following purposes:

(1) to execute the powers and duties vested in the City of Baltimore by the State Land Use Article;

(2) to promote and protect public health, welfare, and quality of life for current and future generations;

(3) to ensure that the visions set forth in the City's Comprehensive Master Plan are implemented by land use regulations consistent with the goals set forth;

(4) to promote the principles and standards enacted in the Baltimore City Sustainability Plan;

(5) to protect the physical environment and public natural resources for all residents;

(6) to preserve and enhance the value of structures, communities, and neighborhoods;

(7) to preserve, protect, and promote the City’s employment base; and

(8) to provide oversight and planning to sustain the healthy growth of the City’s employment centers.

(Ord. 16-581.)

SUBTITLE 2
APPLICABILITY

§ 2-201. Application of Code.

(a) *In general.*

Except as provided in § 2-202 {"Exempt utility and governmental uses"} of this subtitle, this Code applies to all land, uses, and structures within the corporate limits of Baltimore City.

(b) *Required conformance with Code.*

(1) No structure or land, in whole or in part, may be used or occupied, and no structure, in whole or in part, may be erected, constructed, reconstructed, moved, enlarged, or structurally altered unless it conforms to the provisions of this Code.

(2) Conformance with the requirements of this Code does not obviate the need for other permits or licenses.

(c) *Required conformance with Design Manual.*

Failure to comply with the Baltimore City Design Manual is a violation of this Code.

(d) *Required conformance with Landscape Manual*.

Failure to comply with the Baltimore City Landscape Manual is a violation of this Code.

(e) *Code controls over less restrictive agreements.*

(1) This Code is not intended to nullify any private agreement or covenant.

(2) However, where this Code is more restrictive than a private agreement or covenant, this Code controls.

(Ord. 16-581; Ord. 17-015.)

§ 2-202. Exempt utility and governmental uses.

Notwithstanding § 2-201 {"Application of Code"} of this subtitle, this Code does not apply to the following uses and structures, unless otherwise specifically provided in this Code:

(1) overhead electric distribution cables and telephone lines;

(2) underground utility lines and equipment;

(3) conduits, vaults, pipeline laterals, and mains;

(4) traffic signals and government-owned signs;

(5) similar installations and equipment or accessories of a public utility or governmental service;

(6) public transit shelters;

(7) car- and bike-sharing facilities;

(8) automobile charging stations, whether electric or solar;

(9) any installation, structure, equipment, or accessory that is owned by a government entity and located in a public right-of-way; and

(10) any installation, structure, equipment, or accessory that is located in a public right-of-way and granted a franchise by Ordinance of the Mayor and City Council.

(Ord. 17-015.)

§ 2-203. Transition rules.

(a) *In general.*

In determining the applicability of this Code to structures or uses previously governed under other zoning regulations, the following rules apply.

(b) *Preexisting unlawful structures and uses.*

A structure or use that was unlawful at the time this Code became effective (June 5, 2017):

(1) does not become lawful solely by the adoption of this Code or any amendment to it; and

(2) even if made lawful by this Code or an amendment to it, remains unlawful to the extent that the structure or use conflicts with any of the requirements of this Code or of the Baltimore City Building, Fire, and Related Codes Article, including any failure to obtain the necessary use permit and occupancy permit.

(c) *Preexisting permitted use reclassified as conditional.*

(1) If a preexisting permitted use is reclassified by this Code or an amendment to it as a conditional use for the Zoning District in which it is located, that use may be continued as a lawful conditional use, subject to the conditions and restrictions previously imposed on it by law or regulation.

(2) Any subsequent change to that use, including any addition, expansion, relocation, or structural alteration, is subject to the procedural and substantive requirements imposed by this Code on conditional uses.

(d) *Preexisting nonconforming use reclassified as permitted or conditional*.

(1) If a preexisting nonconforming use is reclassified by this Code or an amendment to it as a permitted or conditional use for the zoning district in which it is located, that use may be continued as a lawful permitted or conditional use, as the case may be.

(2) Any subsequent change to that use, including any addition, expansion, relocation, or structural alteration, is subject to this Code and, if a conditional use, to the procedural and substantive requirements imposed by this Code on conditional uses.

(e) *Nonconformities – Preexisting lawful use no longer permitted or conditional..*

If a preexisting lawful use is reclassified by this Code or an amendment to it so that the use is no longer a permitted or conditional use in the zoning district in which it is located, that use may be continued as a lawful nonconforming use, subject to the requirements and limitations imposed by Title 18 {"Nonconformities"} of this Code.

(f) *Nonconformities – Preexisting lawful structures no longer conforming.*

If a preexisting lawful structure does not meet all standards newly set forth by this Code or an amendment to it, that structure may be continued as a lawful nonconforming structure, subject to the requirements and limitations imposed by Title 18 {"Nonconformities"} of this Code.

(g) *Nonconformities – Preexisting lawful lots no longer conforming.*

If a preexisting lawful lot does not meet all standards newly set forth in this Code or an amendment to it, that lot may be continued as a lawful nonconforming lot, subject to the requirements and limitations imposed by Title 18 {"Nonconformities"} of this Code.

(h) *Previously established planned unit development.*

For planned unit developments established before June 5, 2017, transition rules are set forth in § 13-102 {"Transition rules"} of this Code.

(i) *Previously issued building permits.*

If a building permit for a structure was issued before June 5, 2017, or before the effective date of any relevant amendment to this Code and if substantial construction has occurred within 180 days of the issuance of that permit, the structure may be completed in accordance with the plans on the basis of which the building permit was issued.

(j) *Previously granted variances and conditional uses.*

(1) All variances and conditional uses granted before June 5, 2017, or before the effective date of any relevant amendment to this Code remain effective, and the recipient of the variance and conditional use may proceed to develop the property in accordance with the approved plans.

(2) However, if the recipient fails to act timely on the variance or conditional use, as required by § 5-309 {"Expiration of approval"} or § 5-407 {"Expiration of approval"} of this Code, the provisions of this Code govern and the approval is invalid.

(3) Any subsequent change to a conditional use, including any addition, expansion, relocation, or structural alteration, is subject to the procedures and requirements imposed by this Code on conditional uses.

(k) *Pending applications.*

(1) An application that has been submitted and considered complete before June 5, 2017, or before the effective date of any relevant amendment to this Code is governed by the Code provisions in effect when the application was submitted.

(2) A new application submitted after June 5, 2017, or after the effective date of any relevant amendment to this Code is governed by the Code provisions in effect when the application was submitted.

(3) If a pending application is modified after its submittal, the Zoning Administrator must review the application to determine if the proposed modifications constitute a new application. If the Zoning Administrator determines that the modifications constitute a new application, the application must be resubmitted under the Code provisions then in effect at the time of resubmittal.

(Ord. 16-581; Ord. 17-015.)

SUBTITLE 3
SHORT TITLE

§ 2-301. Short Title.

This Code, together with the zoning map adopted under it, may be cited as the "Zoning Code of Baltimore City".

(Ord. 16-581.)

TITLE 3
OUTLINE OF CODE ADMINISTRATION

SUBTITLE 1
PURPOSE OF TITLE

§ 3-101. Purpose.

(a) *In general.*

The purpose of this title is to outline the specific powers and duties of the different administrative bodies and officials who implement this Code.

(b) *Conflicts with Title 4 or Title 5.*

In the case of any conflict between this title and Title 4 {"Development Reviews"} or Title 5 {"Applications and Authorizations"} of this Code, the provisions of Titles 4 and 5 control. *(Ord. 16-581.)*

SUBTITLE 2
ADMINISTRATIVE AGENCIES AND OFFICIALS

§ 3-201. Zoning Administrator.

(a) *Office established.*

(1) There is an Office of Zoning Administrator, constituted as an independent unit of the Department of Housing and Community Development.

(2) The Zoning Administrator is the executive head of the Office.

(3) Employees of the Office may be appointed as authorized by the Ordinance of Estimates.

(b) *Powers and duties – In general.*

The Zoning Administrator administers and enforces this Code.

(c) *Powers and duties – Specific.*

The Zoning Administrator has the following powers and duties under this Code:

(1) to determine whether a variance is a major or minor variance (Title 5, Subtitle 3);

(2) to grant minor variances (Title 5, Subtitle 3);

(3) to authorize use permits (Title 5, Subtitle 7);

(4) to provide zoning consultations (Title 5, Subtitle 8);

(5) to issue zoning verifications (Title 5, Subtitle 9);

(6) to inspect structures and uses of land to determine compliance with this Code and, where violations are found, initiate action to secure compliance;

(7) to preserve all records from the administration of the zoning law since its enactment by Ordinance 31-1247;

(8) to maintain permanent records of this Code and of all actions taken under it, including:

(i) all maps adopted under this Code; and

(ii) all amendments to this Code and to the maps adopted under it;

(iii) the rules and regulations of the Board of Municipal and Zoning Appeals;

(iv) applications for and approvals of conditional uses and variances; and

(v) appeals taken under this Code;

(9) to provide and maintain a public information service on matters arising out of this Code;

(10) Where reasonable, necessary, and not a fundamental alteration of this Code, to provide reasonable accommodation in the application of this Code for the siting, development, and use of housing or services for an individual protected under the Federal Americans with Disabilities Act or the Federal Fair Housing Amendments Act;

(11) to receive, file, review, maintain copies of, and forward to the Board of Municipal and Zoning Appeals applications for conditional uses, variances, appeals, and other matters on which the Board is required to act;

(12) to perform completeness review of applications (§ 5-202);

(13) with the approval of the Board of Estimates, to set fees for processing applications, issuing permits and other authorizations, and performing the various other functions required or authorized by this Code; and

(14) to perform all other functions assigned to the Zoning Administrator by this Code.
(Ord. 16-581; Ord. 17-015.)

§ 3-202. Board of Municipal and Zoning Appeals.

(a) *Board established.*

There is a Board of Municipal and Zoning Appeals, as established in City Charter Article VII, § 82.

(b) *Powers and duties.*

In addition to the powers and duties specified in City Charter Article VII, §§ 83 through 89 and in State law, the Board of Municipal and Zoning Appeals has the following powers and duties under this Code:

(1) to grant major variances (Title 5, Subtitle 3);

(2) to grant conditional use authorizations (Title 5, Subtitle 4);

(3) to hear appeals from decisions of the Zoning Administrator;

(4) with the approval of the Board of Estimates, to set fees for filing and hearing appeals, granting variances, and for the various other functions required or authorized by this Code; and

(5) to perform all other functions assigned to the Board by this Code.

(c) *Rules and Regulations.*

(1) The Board of Municipal and Zoning Appeals may adopt rules and regulations:

(i) for the conduct of its practices and procedures; and

(ii) as otherwise directed or authorized in this Code.

(2) A copy of all rules and regulations adopted by the Board must be filed with the Department of Legislative Reference before they take effect.

(d) *Copies of all matters to Administrator.*

The Board of Municipal and Zoning Appeals must provide the Zoning Administrator with copies of all matters acted on by the Board, including:

(1) all orders, requirements, decisions, determinations, rules, and regulations; and

(2) all other information necessary for the proper administration and enforcement of this Code.

(e) *Meetings.*

Meetings of the Board of Municipal and Zoning Appeals are held:

(1) at the call of the chair; and

(2) at any other time that the Board determines by general rule.

(f) *Public hearings – Open to public.*

(1) All hearings of the Board of Municipal and Zoning Appeals under this Code must be open to the public.

(2) At least once in every 2 calendar months, at least 1 session of hearings must be scheduled to begin after 5 p.m.

(g) *Public hearings – Scheduling, notices, decision.*

The Board of Municipal and Zoning Appeals must:

(1) fix a reasonable time and place for the public hearing of an application, appeal, or other matter;

(2) give public notice of the hearing in accordance with Title 5 of this Code; and

(3) require the applicant, appellant, or other person initiating the hearing to post the subject property with a notice of the time, place, and purpose of the hearing, as follows:

(i) for a hearing on a variance or conditional use, as provided in § 5-602 {"BMZA – Major variances; conditional uses} of this Code; and

(ii) in all other cases, at least 21 days before the hearing.

(h) *Public hearings – Oaths and witnesses.*

The chair or acting chair of the Board of Municipal and Zoning Appeals may administer oaths and compel the attendance of witnesses.

(i) *Public hearings – Attendance by parties*.

At the hearing, any party may:

(1) appear in person, by agent, or attorney; and

(2) testify as to any material facts.

(j) *Public hearings – Member must be present to participate.*

A member of the Board of Municipal and Zoning Appeals may not participate in a hearing unless the member is physically present at the hearing.

(k) *Voting – Open to public.*

All voting sessions of the Board of Municipal and Zoning Appeals must be open to the public.

(l) *Voting – Number of votes.*

The number of votes specified in the State Land Use Article is required for the Board to:

(1) reverse any order, requirement, decision, or determination made or imposed under this Code by the Zoning Administrator or by some other authorized administrative officer or administrative unit; or

(2) decide in favor of the applicant on any matter on which it is required to pass under this Code.

(m) *Voting – Member must be present to vote.*

A member of the Board of Municipal and Zoning Appeals may not vote on a matter unless the member:

(1) was physically present at the public hearing on the matter: and

(2) is physically present at the voting session.

(n) *Minutes.*

The Board of Municipal and Zoning Appeals must keep minutes of all its proceedings, indicating:

(1) the members present; and

(2) on each question, how each member voted or that the member was absent or failed to vote.

(Ord. 16-581; Ord. 17-015.)

§ 3-203. Planning Commission.

(a) *Commission established.*

There is a Planning Commission, as established in City Charter Article VII, §§ 70 and 71.

(b) *Powers and duties.*

In addition to the powers and duties specified in City Charter Article VII, § 72, the Planning Commission has the following powers and duties under this Code:

(1) to make recommendations on amendments to the zoning text and maps (Title 5, Subtitle 5);

(2) to make recommendations on planned unit developments (Title 13);

(3) to develop and revise from time to time a Design Manual (Title 4, Subtitle 4);

(4) to develop and revise from time to time a Landscape Manual (Title 4, Subtitle 5);

(5) unless specifically provided for otherwise, to hear appeals from the decisions of the Director of Planning on:

(i) site plan review (Title 4, Subtitle 2);

(ii) environmentally sensitive areas review (Title 4, Subtitle 3);

(iii) design review (Title 4, Subtitle 4); and

(iv) landscape review (Title 4, Subtitle 5; Landscape Manual); and

(6) with the approval of the Board of Estimates, to set fees for filing and hearing appeals and for the various other functions required or authorized by this Code;

(7) to begin the next comprehensive rezoning process by January 1, 2024, and submit a bill by June 30, 2025, and to repeat the process every 10 years; and

(8) to perform all other functions assigned to the Commission by this Code.
(Ord. 16-581.)

§ 3-204. Director of Planning.

(a) *Position established.*

There is a Director of Planning, as appointed under City Charter Article VII, § 73.

(b) *Powers and duties.*

In addition to the powers and duties specified in City Charter Article VII, §§ 74 through 80, the Director of Planning has the following powers and duties under this Code:

(1) to perform the following reviews in sessions open to the public and for which public notice is provided:

(i) site plan review (Title 4, Subtitle 2);

(ii) environmentally sensitive areas review (Title 4, Subtitle 3);

(iii) design review (Title 4, Subtitle 4; Design Manual); and

(iv) landscape review (Title 4, Subtitle 5; Landscape Manual);

(2) to review and grant administrative exceptions for design review (§ 4-409);

(3) from time to time, to initiate a study of this Code, the Design Manual, and the Landscape Manual and report his or her recommendations to:

(i) the City Council;

(ii) the Board of Municipal and Zoning Appeals;

(iii) the Housing Commissioner;

(iv) the Health Commissioner;

(v) the Planning Commission; and

(vi) any others deemed appropriate; and

(4) with the approval of the Board of Estimates, to set fees for site-plan, sensitive-area, design, and landscape reviews and for the various other functions required or authorized by this Code; and

(5) to perform all other functions assigned to the Director by this Code.
(Ord. 16-581; Ord. 17-015.)

§ 3-205. Commissioner of Housing and Community Development.

In addition to the powers and duties specified elsewhere in the City Code, the Commissioner of Housing and Community Development (who also serves as the Building Official) has the power and duty under this Code:

(1) to issue use permits (Title 5, Subtitle 7); and

(2) to perform all other functions assigned to the Housing Commissioner by this Code.
(Ord. 16-581; Ord. 17-015.)

TITLE 4
DEVELOPMENT REVIEWS

SUBTITLE 1
PURPOSE OF TITLE

§ 4-101. Purpose.

The purpose of this title is to delineate:

(1) which development permits require review and approval by the Director of Planning; and

(2) the standards applicable to those reviews and approvals.

(Ord. 16-581.)

SUBTITLE 2
SITE PLAN REVIEW

§ 4-201. Purpose.

(a) *Intent – Guidance, interagency review, and ensuring compliance.*

Site plan review is intended:

(1) to provide guidance to the applicant early in the design process;

(2) to provide for interagency review; and

(3) to ensure that the proposed development complies with this Code, the Subdivision Rules and Regulations, the Site Plan Review Manual, the Building, Fire and Related Codes, and other applicable guidelines and requirements.

(b) *Intent – Safe and functional, etc., development.*

The recommendations of site plan review are intended to ensure safe, functional, efficient, and orderly development with high standards of design.

(c) *General purposes.*

In general, the purpose of the site plan review process is to**:**

(1) protect public health, safety, and welfare;

(2) minimize adverse effects upon pedestrian and vehicular traffic;

(3) ensure the design is safe, environmentally sound, aesthetically responsive, and protects properties, streets, and rights-of-way in the immediate vicinity, and the general public;

(4) ensure compliance with the Comprehensive Master Plan and this Code; and

(5) provide a consistent and uniform method of review.

(Ord. 16-581.)

§ 4-202. Site Plan Review Manual.

(a) *In general.*

The Planning Commission must develop and may revise from time to time a Site Plan Review Manual that sets forth standards and procedures for site plan review in accordance with this Code.

(b) *Requisites for effectiveness.*

This Manual and any revisions of it may take effect only after:

(1) Planning Commission approval at a public session;

(2) filing with the Department of Legislative Reference; and

(3) posting on the City website.

(Ord. 16-581.)

§ 4-203. Applicability.

Site plan review is required for the following types of development applications:

(1) new construction that involves any of the following:

(i) any proposed development over 15,000 square feet of gross floor area;

(ii) developments with multiple structures on a single lot, excluding accessory structures; and

(iii) all multi-tenant commercial development, including mixed-use development;

(2) subdivision of land;

(3) additions or structural alterations to an existing structure, other than a single-family detached or semi-detached dwelling, that results in a 50% increase in gross floor area over the gross floor area of the existing structure prior to the addition or alteration;

(4) planned unit development;

(5) conditional use, unless the conditional use can and will be fully contained within an existing structure;

(6) parking lot or structures containing 5 or more motor vehicle parking spaces;

(7) any development within an environmentally sensitive area, including projects in a 100-Year Flood Plain and projects within the Buffer of the Critical Area (*See* Subtitle 3 {"Environmentally Sensitive Areas Review"} of this title);

(8) urban agriculture or community-managed open-space farm; and

(9) any development within the C-5-IH Subdistrict.

(Ord. 16-581; Ord. 17-015.)

§ 4-204. Approval prerequisite to permit.

(a) *In general.*

Site plan approval is required before any permits may be issued for any development to which § 4-203 {"Applicability"} of this subtitle applies.

(b) *Required for plan change; Time lapse.*

Site plan approval is also required if:

(1) no permits have been issued; and

(2) either:

(i) a final approved site plan has been changed; or

(ii) more than 1 year has passed since final approval.

(Ord. 16-581.)

§ 4-205. Submittal requirements.

Submittal requirements for site plan review are as found in:

(1) the Site Plan Review Manual; and

(2) for environmentally sensitive areas, in Subtitle 3 {"Environmentally Sensitive Areas Review"} of this title.

(Ord. 16-581.)

§ 4-206. Procedures.

The Director of Planning must review the project in accordance with the procedures found in the Site Plan Review Manual.

(Ord. 16-581.)

§ 4-207. Review standards.

Site plan review standards are as found in:

(1) the Site Plan Review Manual; and

(2) for environmentally sensitive areas, in Subtitle 3 {"Environmentally Sensitive Areas Review"} of this title.

(Ord. 16-581.)

§ 4-208. Administrative appeals.

(a) *Appeal to Commission.*

An applicant who is aggrieved by the final site plan decision of the Director of Planning may appeal that decision to the Planning Commission.

(b) *When filed.*

Appeals must be filed within 30 days of the Planning Director's final decision on the site plan.

(c) *Hearing.*

The Planning Commission must review the Director's decision at a public hearing held within 45 days of receiving the appeal.

(Ord. 16-581.)

SUBTITLE 3
ENVIRONMENTALLY SENSITIVE AREAS REVIEW

§ 4-301. Purpose.

The purpose of the environmentally sensitive areas development review process is to:

(1) identify, prioritize, and protect environmentally sensitive areas during the initial stages of the development review process;

(2) ensure that the disturbance, protection, and restoration of environmentally sensitive areas are in accordance with all applicable federal, state, and local environmental regulations;

(3) establish levels of protection for environmentally sensitive areas that vary with the priority ranking of each feature or combination of features;

(4) guide site development so that negative impacts to the environmentally sensitive areas are avoided or minimized to the greatest extent possible;

(5) encourage the use of innovative development techniques and provide flexibility in the planning process to protect the environment;

(6) establish levels of protection for existing sensitive areas and institute requirements for the restoration of sensitive areas found to be prematurely destroyed or altered; and

(7) protect the development from forces of nature.

(Ord. 16-581.)

§ 4-302. Applicability.

(a) *Adjacent lands.*

In determining whether a proposed development contains environmentally sensitive areas all adjacent lands under the same ownership or control must be considered.

(b) *Areas subject to process.*

If a site plan contains any environmentally sensitive area, it is subject to the environmentally sensitive areas development review process.

(Ord. 16-581.)

§ 4-303. Approval prerequisite to permit.

Environmentally sensitive areas review is required before any permits may be issued for any development to which § 4-302 {"Applicability"} of this subtitle applies.

(Ord. 16-581.)

§ 4-304. Submittal requirements.

The presence or absence of environmentally sensitive areas must be documented on an existing conditions plan, to be submitted as part of site plan review. Existing environmentally sensitive areas must be shown on the existing conditions plan.

(Ord. 16-581.)

§ 4-305. Review standards.

(a) *Compliance with environmental regulations.*

The Director of Planning must review the project for compliance with environmental regulations.

(b) *Regulations listing.*

Applicable regulations include:

(1) Floodplains: City Code Article 7, Division I {"Floodplain Management"};

(2) Chesapeake Bay Critical Area: Title 7, Subtitle 4, of this Code;

(3) Forest Conservation: City Code Article 7, Division IV {"Forest and Tree Conservation"}; and

(4) Significant Trees and Specimen Trees: Sites not required to comply with Forest Conservation regulations must protect these trees as required by the Baltimore City Landscape Manual.

(Ord. 16-581.)

§ 4-306. Administrative appeals.

(a) *Appeal to Commission.*

An applicant who is aggrieved by the final decision of the Director of Planning may appeal that decision to the Planning Commission.

(b) *When filed.*

Appeals must be filed within 30 days of the Planning Director's final decision on the environmentally sensitive areas review.

(c) *Hearing.*

The Planning Commission must review the Director's decision at a public hearing held within 45 days of receiving the appeal.

(Ord. 16-581.)

SUBTITLE 4
DESIGN REVIEW

§ 4-401. Purpose.

Design review is intended to provide a procedure to ensure that certain development proposals comply with the design standards established under this Code.
(Ord. 16-581.)

§ 4-402. Design Manual.

The Planning Commission must develop and may revise from time to time a Design Manual that sets forth required design standards in accordance with the goals and objectives set forth in this subtitle.
(Ord. 16-581.)

§ 4-403. Goals.

The goals governing development of the Design Manual are:

(1) to enhance the quality of the City's built environment, architectural character, and sense of place;

(2) to foster economic vitality of the City's neighborhoods and commercial districts;

(3) to enhance the overall urban design of Baltimore's neighborhoods; and

(4) to enhance the quality of life of City residents with development that is sensitive to its context and adjacencies in the public realm.
(Ord. 16-581.)

§ 4-404. Objectives.

The objectives governing development of the Design Manual are:

(1) to provide clear guidance for the design of residential, commercial, and mixed use development throughout the City;

(2) to facilitate the process for design review and approval of structures within the City's development review process;

(3) to ensure that the public realm is as thoroughly considered and articulated as principal structures;

(4) to articulate spatial relationships, provide image, develop sense of place, and improve the aesthetics of the built environment; and

(5) to provide flexibility and encourage creative solutions to meet the intents and purposes of the Design Manual.
(Ord. 16-581.)

§ 4-405. Applicability.

(a) *In general.*

Except as provided in subsection (b) of this section, design review is required for the following types of development:

(1) new construction of dwellings, excluding additions;

(2) new construction of rowhouses;

(3) upper floor additions and roof decks on existing rowhouses;

(4) when exterior modifications are proposed for residential conversions in the R-7, R-8, R-9, and R-10 Districts;

(5) the establishment of a non-residential use within the R-MU Overlay District;

(6) all new construction and additions in the C-5 District;

(7) all substantial modifications of the facade of a structure in the C-5 District;

(8) planned unit development;

(9) any sign over 100 square feet in area;

(10) any electronic message sign;

(11) all freestanding signs, all scrolling newscast signs, and all wall signs above the ground floor in the C-5 District;

(12) banner signs used as permanent wall signs; and

(13) any new construction that involves:

(i) a proposed development over 15,000 square feet;

(ii) a multi-tenant commercial development, including mixed-use development;

(iii) construction in an area designated a “Main Street” in accordance with criteria set by The National Trust for Historic Preservation; or

(iv) construction in a TOD District or in the W Overlay District.

(b) *Exception.*

Design review is not required for development projects that are subject to review by the Commission for Historical and Architectural Preservation.

(Ord. 16-581; Ord. 17-015.)

§ 4-406. Approval prerequisite to permit.

Design review approval is required before any permits may be issued for any development to which § 4-405{"Applicability"} of this subtitle applies.
(Ord. 16-581.)

§ 4-407. Submittal requirements.

Submittal requirements for design review are:

(1) as provided in § 5-201 {"Filing"} of this Code; and

(2) as required by the Director of Planning.
(Ord. 16-581.)

§ 4-408. Procedures.

(a) *Director to review.*

Once it is determined that an application is subject to design review, the Director of Planning must review the project for compliance with the design standards of this Code.

(b) *Time for completion.*

(1) Design review must be completed within 15 days of receipt of a complete application.

(2) If, in the Director's judgment, the application does not contain sufficient information to complete design review, the Director of Planning may request additional information from the applicant. In that event, the 15-day period will be suspended pending receipt of all requested information. A decision must be rendered within 15 days of receipt of the additional information.
(Ord. 16-581.)

§ 4-409. Administrative exceptions.

(a) *Purpose and applicability.*

(1) This Code recognizes that the design standards cannot address every anticipated architectural design element of a development. Accordingly, an administrative exception to the design standards of the district may be requested during the design review process.

(2) This administrative exception allows the Director of Planning to approve exceptions to the design standards within each of the districts.

(b) *Authority.*

(1) The Director of Planning may approve an administrative exception in cases where the proposed architectural design of a structure meets the intent of the design review provisions but fails to meet 1 or more specific design standards.

(2) The Director of Planning may not approve any administrative or other exception for any of the use, bulk, or yard standards of the zoning district.

(c) *Standard for exceptions.*

In order to approve an administrative exception, the Director of Planning must find that:

(1) the administrative exception is generally compatible with the intent of the design standards and the area of the development; and

(2) the design integrity and details of the building are acceptable within the context of a specific site and need not be achieved through a strict response to the details of the design standards contained in this Code.

(Ord. 16-581.)

§ 4-410. Administrative appeals.

(a) *Appeal to Commission.*

An applicant who is aggrieved by the final design review decision of the Director of Planning may appeal that decision to the Planning Commission.

(b) *When filed.*

Appeals must be filed within 30 days of the Planning Director's final decision on the design review.

(c) *Hearing.*

The Planning Commission must review the decision at a public hearing held within 45 days of receiving the appeal.

(Ord. 16-581.)

SUBTITLE 5
LANDSCAPE REVIEW

§ 4-501. Purpose.

Landscape review is intended to provide a procedure to ensure that certain development proposals comply with landscaping and screening standards of this Code.
(Ord. 16-581.)

§ 4-502. Landscape Manual.

The Planning Commission must develop and may revise from time to time a Landscape Manual that sets forth the required design, review, approval, installation, and maintenance of landscape in accordance with the goals and objectives set forth in this subtitle.
(Ord. 16-581.)

§ 4-503. Goals.

The goals governing development of the Landscape Manual are:

(1) to improve and increase the City's environmental quality and green infrastructure network;

(2) to preserve and enhance the City's character and sense of place;

(3) to foster the economic vitality of the City's neighborhoods and commercial districts;

(4) to provide a clear process for the design, review, and approval of landscape plans within the City's development review process; and

(5) to promote the long-term health and maintenance of the City's landscape and tree canopy.
(Ord. 16-581.)

§ 4-504. Objectives – Environmental.

The environmental objectives governing development of the Landscape Manual are:

(1) to foster environmentally sensitive site design that preserves natural vegetation and landforms when appropriate; and

(2) to complement the built environment through planting that:

(i) improves water quality and reduces stormwater run-off;

(ii) reduces soil erosion;

(iii) increases the City's tree canopy;

(iv) promotes biodiversity; and

(v) helps to mitigate the urban heat island effect.

(Ord. 16-581.)

§ 4-505. Objectives – Character and sense of place.

The character-and-sense-of-place objectives governing development of the Landscape Manual are:

(1) to articulate spatial relationships, provide image, develop sense of place, and improve the aesthetics of the built environment;

(2) to enhance the quality of life of residents through planting that provides comfortable outdoor spaces for people to occupy;

(3) to create pedestrian and bicycle-friendly environments; and

(4) to provide visual screens, buffers, and shade that:

(i) diminish undesirable views;

(ii) reduce glare, noise, and heat; and

(iii) mitigate the impacts of intensive uses.

(Ord. 16-581.)

§ 4-506. Objectives – Economic.

The economic objectives governing development of the Landscape Manual are:

(1) to provide landscape design that is functional, cost effective, and sound; and

(2) to create environments that are safe for residents and visitors and deterrents to potential criminals.

(Ord. 16-581.)

§ 4-507. Objectives – Landscape installation and maintenance.

The landscape-installation-and-maintenance objectives governing development of the Landscape Manual are

(1) to ensure that landscape is installed and maintained in conformance with approved landscape plans;

(2) to ensure that landscape is installed and maintained in a manner that will promote the proper health, function, and appearance of the landscape; and

(3) to encourage the use of sustainable landscape construction and maintenance techniques that support the goals established by the Baltimore Sustainability Plan.

(Ord. 16-581.)

§ 4-508. Review process.

The Landscape Manual must provide for a review process that:

(1) integrates the preparation, review, and approval of landscape plans into the City process for development review and approval;

(2) coordinates landscape requirements with related regulations, including those for forest conservation, stormwater management, green building standards, and the Chesapeake Bay Critical Area; and

(3) allows flexibility and encourages creative solutions to meet the goals and objectives of the Landscape Manual.

(Ord. 16-581.)

§ 4-509. Applicability.

Landscape review is required for the types of development specified in the Landscape Manual.

(Ord. 16-581.)

§ 4-510. Approval prerequisite to permit.

Landscape review approval is required before any permits may be issued for any development to which § 4-509 {"Applicability"} of this subtitle applies.

(Ord. 16-581.)

§ 4-511. Submittal requirements.

Submittal requirements for landscape review are as found in the Landscape Manual.

(Ord. 16-581.)

§ 4-512. Procedures.

The Director of Planning must review the project in accordance with the procedures found in the Landscape Manual.

(Ord. 16-581.)

§ 4-513. Review standards.

Landscape review standards are as found in the Landscape Manual.

(Ord. 16-581.)

§ 4-514. Administrative appeals.

(a) *Appeal to Commission.*

An applicant who is aggrieved by the final landscape review decision of the Director of Planning may appeal that decision to the Planning Commission.

(b) *When filed.*

Appeals must be filed within 30 days of the Planning Director's final decision on the landscape review.

(c) *Hearing.*

The Planning Commission must review the decision at a public hearing held within 45 days of receiving the appeal.

(Ord. 16-581.)

{PAGE LEFT INTENTIONALLY BLANK}

TITLE 5
APPLICATIONS AND AUTHORIZATIONS

SUBTITLE 1
PURPOSE OF TITLE

§ 5-101. Purpose.

The purpose of this title is to set out the general regulations governing zoning applications, variances, conditional uses, text and map amendments, notices, use permits, interpretations, and verifications.
(Ord. 16-581.)

SUBTITLE 2
APPLICATIONS

§ 5-201. Introduction of proposed authorization.

(a) *Introduction by ordinance.*

A member of the City Council may introduce a proposed ordinance to expressly approve, authorize, or amend:

(1) a major variance;

(2) a conditional use;

(3) a text amendment;

(4) a map amendment;

(5) an educational campus master plan;

(6) a hospital general development plan;

(7) an area of special sign control; or

(8) a planned unit development.

(b) *Introduction by application.*

(1) Notwithstanding subsection (a) of this section, a person must file an application under this subsection to request:

(i) a minor variance;

(ii) a major variance that, at the time of filing, is not the subject of legislation before the City Council;

(iii) a conditional use that, at the time of filing, is not the subject of legislation before the City Council;

(iv) a use permit;

(v) a zoning appeal; and

(vi) a zoning consultation.

(2) An application for a variance, conditional use, use permit, or zoning appeal must be filed by:

(i) the owner of property to which the application applies; or

(ii) a person expressly authorized by the owner in writing.

(3) An application for a zoning interpretation must be filed by:

(i) an owner of any property in the City;

(ii) a person expressly authorized by a property owner in writing; or

(iii) any City Councilmember or other official of City government.

(c) *Filing.*

(1) All applications must be filed with the Zoning Administrator.

(2) An application must be:

(i) on the form provided by the City; and

(ii) filed with the number of copies that the instructions specify.

(3) The application must include the information, plans, and data specified by the City's application requirements and sufficient to determine whether the application conforms with the requirements of this Code.

(4) All plans must be at a scale sufficient to permit a clear and precise understanding of the proposal.

(d) *Traffic mitigation.*

(1) *Referral to DoT.*

Within 15 business days of receiving a completed application, the Zoning Administrator must refer the application and all accompanying documents to the Director of Transportation, if:

(i) traffic-mitigation requirements for the proposed structure or use have not already been complied with in accordance with this Code or the City Building, Fire, and Related Codes Article; and

(ii) the proposed structure or use:

(A) is in a Traffic-Mitigation Zone designated in Building Code § 3805 {"Traffic-Mitigation Zone"} and involves 10 or more dwelling units;

(B) involves 15,000 sq. ft. or more of gross floor area; or

(C) involves 50 or more dwelling units.

(2) *Mitigation required.*

A Traffic-Impact Study or the payment of a Traffic-Mitigation Fee is required if any 1 of the criteria specified in Building Code § 3802 {"Scope of Chapter"} applies.

(3) *Procedures and conduct.*

The Director of Transportation must review the application as provided in Building Code 3802 {"Scope of Chapter"}.

(4) *Mitigation procedure.*

If the Director of Transportation informs the applicant that traffic mitigation is required under Building Code Chapter 38 {"Traffic Impact and Mitigation"}, the applicant must comply with the applicable procedures and requirements of that chapter.

(e) *Required site plan and drawings.*

(1) Applications for a conditional use, variance, or design review must be accompanied by a site plan.

(2) The site plan must:

(i) be drawn to scale and fully dimensioned;

(ii) indicate the lot and block, or the relevant portions of them;

(iii) show the ground area, height, and bulk of the structure, and the location of the structure in relation to the lot lines;

(iv) indicate the use to be made of the structure or land; and

(v) include any other information that the Zoning Administrator requires for the proper administration and enforcement of this Code.

(Ord. 16-581.)

§ 5-202. Completeness review.

(a) *Administrator to examine.*

(1) The Zoning Administrator must examine all applications within 10 days after filing.

(2) An application is not considered complete unless, among all other requirements, all fees are paid when due.

(b) *Subsequent changes.*

(1) After an application is determined to be complete, any change made by the applicant to the application must be submitted to the Zoning Administrator and the Board of

Municipal and Zoning Appeals no later than 15 days before the date scheduled for the hearing to be held under this title.

(2) Any later changes to the application must be made on the record at the hearing.
(Ord. 16-581; Ord. 17-015.)

§ 5-203. Required fees.

Every application must be accompanied by the required filing fee.
(Ord. 16-581.)

§ 5-204. Withdrawal of application.

An applicant has the right to withdraw an application at any time before a decision is made on the application by the appropriate body. There will be no refund of fees. Requests for withdrawal must be in writing by the applicant.
(Ord. 16-581.)

§ 5-205. Reapplication waiting period.

(a) *In general.*

Within 1 year after an application for a variance or a conditional use has been denied, the same application for the same property may not be reviewed or heard unless substantial new evidence is available.

(b) *Resubmission within 1 year.*

(1) If a zoning application is resubmitted for the same property within the 1-year period, the subsequent application must include a detailed description of how the application is a substantially different request or how substantial new evidence justifies its consideration.

(2) The Zoning Administrator must determine whether the subsequent application is a substantially different request or presents substantial new evidence that justifies its consideration. If the Zoning Administrator finds that the application is not appropriate for resubmittal, the Zoning Administrator must summarily, and without need for a hearing, deny the request.
(Ord. 16-581.)

SUBTITLE 3
VARIANCES

§ 5-301. Purpose.

(a) *In general.*

The purpose of the variance procedure is to afford a property owner relief from certain regulations of the Zoning Code when unnecessary hardship or practical difficulty exists.

(b) *Application.*

The variance procedure applies only to changes in bulk and yard regulations. It does not apply to changes in the uses allowed within a zoning district.

(Ord. 16-581; Ord. 17-015.)

§ 5-302. Minor and major variances distinguished.

(a) *In general.*

This Code allows for 2 types of variances that may be granted under this subtitle, minor variances and major variances.

(b) *Minor variances.*

(1) Minor variances comprise the following specified variances:

(i) a reduction in lot width by no more than 10% of the applicable minimum lot width requirements;

(ii) a reduction in required yards and setbacks by no more than 10% or 2 feet, whichever is less;

(iii) a reduction in the number of off-street parking spaces by no more than 10% of the applicable minimum requirements;

(iv) a reduction in the required alley width for access to off-street parking; and

(v) a variance to bulk or yard regulations if:

(A) the parcel of land is improved with a nonconforming structure that has been in existence for at least 50 years;

(B) the variance would not permit more than a 10% cumulative increase in the bulk and density of a structure that has been in existence for 50 or more years; and

(C) in the opinion of the Zoning Administrator, the application complies with all applicable approval criteria for variances.

(2) The Zoning Administrator may grant minor variances from the regulations of this Code.

(c) *Major variances.*

(1) Any variance not identified in subsection (b) of this section as a minor variance is a major variance.

(2) Unless legislation has been introduced to approve a variance by ordinance, the Board of Municipal and Zoning Appeals may grant or deny any application for a major variance.

(Ord. 16-581; Ord. 17-015.)

§ 5-303. Review of applications.

(a) *Determinations by Zoning Administrator*.

The Zoning Administrator must determine:

(1) whether the application is for a minor variance or a major variance; and

(2) which City agencies and officials, if any, should be asked to review the application and submit written reports and recommendations on it.

(b) *Notice of findings*.

(1) The Zoning Administrator must inform the applicant of the determination made under subsection (a)(1) of this section.

(2) If the Zoning Administrator determines the application is for a major variance, the Zoning Administrator must inform the applicant that:

(i) a major variance can be granted by ordinance or by the Board of Municipal and Zoning Appeals;

(ii) the applicant may request the City Council to introduce an ordinance to grant the major variance;

(iii) in the absence of legislation to approve a major variance by ordinance, the Board of Municipal and Zoning Appeals may grant or deny the major variance; and

(iv) the applicant may appeal the decision of the Zoning Administrator and that the appeal must be filed within 30 days of the Zoning Administrator's decision.

(3) The Zoning Administrator must forward an application determined to be a major variance to the Board of Municipal and Zoning Appeals.

(Ord. 16-581.)

§ 5-304. Minor variances.

(a) *Review standards; Notice.*

The Zoning Administrator must review and evaluate the application pursuant to the standards in § 5-308 {"Approval standards"} of this subtitle. Public notice of the application must be posted in accordance with Title 5, Subtitle 6 {"Notices"} of this Code.

(b) *Resubmission on objection.*

If written objection to the minor variance is received before the end of the required posting period, the application must be resubmitted to the Board of Municipal and Zoning Appeals as a major variance, subject to the application, notice, and public hearing requirements applicable to major variances.

(c) *Decision by Administrator.*

If no written objection is timely received, the Zoning Administrator must render a written decision on the application within 30 days of the end of the required posting period and either approve, approve with qualifications, or deny the application.

(d) *Appeal to BMZA.*

The applicant may appeal the Zoning Administrator's decision to the Board of Municipal and Zoning Appeals. The appeal must be filed within 30 days of the Zoning Administrator's decision.

(Ord. 16-581.)

§ 5-305. Major variances.

(a) *Review standards.*

The Board of Municipal and Zoning Appeals or the City Council, as the case may be, must evaluate the request for a variance, based on the evidence presented at a public hearing, in accordance with the standards in § 5-308 {"Approval standards"} of this subtitle.

(b) *Procedures before the BMZA.*

(1) *Public hearing required.*

(i) The Board of Municipal and Zoning Appeals must consider a proposed major variance in a public hearing.

(ii) Notice of the public hearing must be given in accordance with Title 5, Subtitle 6 {"Notices"} of this Code.

(iii) Except as provided in subsection (b) of this section, the hearing must be concluded no more than 60 days from the Board's receipt of the completed application.

(2) *Waiver of time limit.*

(i) If, in the judgment of the Board of Municipal and Zoning Appeals, the application does not contain sufficient information to enable the Board to properly discharge its responsibilities, the Board may request additional information from the applicant or from City agencies or officials.

(ii) In that event, the 60-day period will be suspended or the public hearing continued pending receipt of all requested information.

(iii) The applicant may also waive this time limit by requesting a postponement from the Board of Municipal and Zoning Appeals.

(3) *Decision by Board.*

(i) The Board of Municipal and Zoning Appeals must render its written decision, approving, approving with conditions, or denying the application, within 30 days of the close of the public hearing.

(ii) The Board may extend this period for up to an additional 30 days on a majority vote of the Board at a publicly scheduled meeting.

(4) *Cessation of BMZA procedures*.

(i) All actions and other procedures taken under this subsection must immediately cease if:

(A) the Board of Municipal and Zoning Appeals has not rendered a written decision under this subsection; and

(B) the City Council has referred to the Board a bill to approve the variance by ordinance.

(ii) On this cessation of procedures, the application is deemed to be voluntarily withdrawn by the applicant.

(c) *legislative limitation.*

No legislation may be introduced to approve a major variance after the Board of Zoning Appeals has rendered a written decision on an application involving the same subject matter.

(Ord. 16-581; Ord. 17-015.)

§ 5-306. Qualifications.

(a) *Criteria for imposing.*

Before approving any variance, the Zoning Administrator, the Board of Municipal and Zoning Appeals, or the City Council, as the case may be, may impose on the establishment, location,

construction, maintenance, or operation of the variance, any condition, restriction, or limitation that it considers necessary or desirable to:

(1) reduce or minimize the effect of the variance on other properties in the neighborhood;

(2) secure compliance with the standards and requirements of this Code; and

(3) better carry out the intent and purpose of this subtitle.

(b) *Assurances of compliance*.

The Zoning Administrator, the Board of Municipal and Zoning Appeals, or the City Council, as the case may be, may require whatever evidence and guarantees considered necessary to assure that the conditions, restrictions, and limitations imposed will be met and complied with.

(c) *Failure to comply is a violation of Code.*

Failure to comply with any condition, restriction, or limitation imposed under this section constitutes a violation of this Code.

(Ord. 16-581.)

§ 5-307. Variance less than requested.

A variance less than that requested may be granted by the Zoning Administrator, the Board of Municipal and Zoning Appeals, or the City Council, as the case may be, if the record supports the applicant's right to some relief, but not to the entire relief requested.

(Ord. 16-581.)

§ 5-308. Approval standards.

(a) *Required finding of unnecessary hardship or practical difficulty.*

In order to grant a variance, the Zoning Administrator, the Board of Municipal and Zoning Appeals, or the City Council, as the case may be, must find that, because of the particular physical surroundings, shape, or topographical conditions of the specific structure or land involved, an unnecessary hardship or practical difficulty, as distinguished from a mere inconvenience, would result if the strict letter of the applicable requirement were carried out.

(b) *Other required findings.*

The Zoning Administrator, the Board of Municipal and Zoning Appeals, or the City Council, as the case may be, must also find that:

(1) the conditions on which the application is based are unique to the property for which the variance is sought and are not generally applicable to other property within the same zoning classification;

(2) the unnecessary hardship or practical difficulty is caused by this Code and has not been created by the intentional action or inaction of any person who has a present interest in the property;

(3) the purpose of the variance is not based exclusively on a desire to increase the value or income potential of the property;

(4) the variance will not:

(i) be injurious to the use and enjoyment of other property in the immediate vicinity; or

(ii) substantially diminish and impair property values in the neighborhood;

(5) the variance is in harmony with the purpose and intent of this Code;

(6) the variance is not precluded by and will not adversely affect:

(i) any Urban Renewal Plan;

(ii) the City's Comprehensive Master Plan; or

(iii) any Historical and Architectural Preservation District; and

(7) the variance will not otherwise:

(i) be detrimental to or endanger the public health, safety, or welfare; or

(ii) be in any way contrary to the public interest.

(Ord. 16-581; Ord. 17-015.)

§ 5-309. Expiration of approval.

(a) *Exercise within year required.*

A variance lapses and becomes void 1 year from the date of its final approval, unless substantial construction has occurred within that year.

(b) *Extension by BMZA.*

The Board of Municipal and Zoning Appeals may grant an extension of this period, for both minor and major variances, on written application and for good cause shown, without notice or hearing.

(Ord. 16-581.)

SUBTITLE 4
CONDITIONAL USES

§ 5-401. Purpose.

(a) *In general.*

This Code is based on the division of the City into districts, in which the uses of land and structures and the bulk and location of structures in relation to the land are substantially uniform. Certain uses exist, however, that, because of their unique characteristics, cannot properly be classified in any particular district without consideration, in each case, of the impact of those uses on neighboring land and of the public need for the particular use at the particular location. These uses, referred to as conditional uses, may only be approved as specified in this subtitle.

(b) *Bulk standards.*

In certain districts, bulk standards are allowed additional intensity by conditional use approval. The conditional use in these situations is interpreted as allowing the use within the structure to be more intense than would be allowed under permitted district standards.

(Ord. 16-581.)

§ 5-402. *{Reserved}*

§ 5-403. Referrals.

(a) *Section applicable to CB approvals.*

This section applies to applications for conditional uses that require approval by the Board of Municipal and Zoning Appeals.

(b) *Referral to BMZA for action.*

Once the Zoning Administrator determines that an application for conditional-use approval by the Board of Municipal and Zoning Appeals is complete, the Zoning Administrator must forward the application to the Board for its consideration and action on the application.

(c) *Referral to Planning Director, others for recommendation.*

The Zoning Administrator must also refer the completed application to the following, for their submission within 15 days of the referral, of written reports and recommendations to the Board of Municipal and Zoning Appeals:

(1) the Department of Planning; and

(2) any other City agencies and officials that the Zoning Administrator determines should be asked to review the application and submit written reports and recommendations on it.

(Ord. 16-581.)

§ 5-404. Actions taken.

(a) *Review standards.*

The Board of Municipal and Zoning Appeals or the City Council, as the case may be, must evaluate the request for a conditional use, based on the evidence presented at the public hearing, in accordance with the standards in § 5-406 {"Approval standards"} of this subtitle.

(b) *Procedures before the BMZA.*

(1) *Public hearing required.*

(i) The Board of Municipal and Zoning Appeals must consider a proposed conditional use in a public hearing.

(ii) Notice of the public hearing must be given in accordance with Title 5, Subtitle 6 {"Notices"} of this Code.

(iii) Except as provided in subsection (b) of this section, the hearing must be concluded no more than 60 days from the Board's receipt of the completed application.

(iv) If the Department of Planning or other City agency or official fails to timely submit its written report and recommendations, the Board of Municipal and Zoning Appeals may proceed without that report and recommendations.

(2) *Waiver of time limit.*

(i) If, in the judgment of the Board of Municipal and Zoning Appeals, the application does not contain sufficient information to enable the Board to properly discharge its responsibilities, the Board may request additional information from the applicant or from City agencies or officials.

(ii) In that event, the 60-day period will be suspended or the public hearing continued pending receipt of all requested information.

(iii) The applicant may also waive this time limit by requesting a postponement from the Board of Municipal and Zoning Appeals.

(3) *Decision of Board.*

The Board of Municipal and Zoning Appeals must render its written decision, approving, approving with conditions, or denying the application within 30 days of the close of the public hearing.

(Ord. 16-581.)

§ 5-405. Conditions.

(a) *In general.*

(1) *Imposition authorized.*

Before approving any conditional use, the Board of Municipal and Zoning Appeals or the City Council, as the case may be, may impose on the establishment, location, construction, maintenance, or operation of the conditional use any condition, restriction, or limitation that it considers necessary for the protection of the public interest.

(2) *Criteria for imposing.*

Any condition imposed under this subsection must be reasonably related and roughly proportional to the expected impact of the conditional use.

(b) *Failure to comply is a violation of Code.*

Failure to comply with any condition, restriction, or limitation imposed under this subtitle:

(1) constitutes a violation of this Code; and

(2) in addition to any other civil or criminal remedy or enforcement procedure, is grounds for modification, suspension, or revocation of the conditional use.

(Ord. 16-581.)

§ 5-406. Approval standards.

(a) *Limited criteria for denying.*

Neither the Board of Municipal and Zoning Appeals nor the City Council, as the case may be, may approve a conditional use unless, after public notice and hearing and on consideration of the standards required by this subtitle, it finds that:

(1) the establishment, location, construction, maintenance, or operation of the conditional use would not be detrimental to or endanger the public health, safety, or welfare;

(2) the use would not be precluded by any other law, including an applicable Urban Renewal Plan;

(3) the authorization would not be contrary to the public interest; and

(4) the authorization would be in harmony with the purpose and intent of this Code.

(b) *Required considerations.*

As a further guide to its decision on the facts of each case, the Board of Municipal and Zoning Appeals must consider the following, where appropriate:

(1) the nature of the proposed site, including its size and shape and the proposed size, shape, and arrangement of structures;

(2) the resulting traffic patterns and adequacy of proposed off-street parking and loading;

(3) the nature of the surrounding area and the extent to which the proposed use might impair its present and future development;

(4) the proximity of dwellings, churches, schools, public structures, and other places of public gathering;

(5) accessibility of the premises for emergency vehicles;

(6) accessibility of light and air to the premises and to the property in the vicinity;

(7) the type and location of adequate utilities, access roads, drainage, and other necessary facilities that have been or will be provided;

(8) the preservation of cultural and historic landmarks and structures;

(9) the character of the neighborhood;

(10) the provisions of the City's Comprehensive Master Plan;

(11) the provisions of any applicable Urban Renewal Plan;

(12) all applicable standards and requirements of this Code;

(13) the intent and purpose of this Code; and

(14) any other matters considered to be in the interest of the general welfare.

(Ord. 16-581; Ord. 17-015.)

§ 5-407. Expiration of approval.

(a) *Exercise within year required.*

A conditional use lapses and becomes void 1 year from the date of its final approval unless, within that year:

(1) a building permit is obtained; and

(2) either:

(i) the erection or alteration of a structure is started; or

(ii) the use is begun within such period.

(b) *Extension by BMZA.*

The Board of Municipal and Zoning Appeals may grant an extension of this period on written application and for good cause shown, without notice or hearing.

(Ord. 16-581.)

§ 5-408. Discontinued conditional use.

If any conditional use is discontinued for a continuous period of 2 years or more, the conditional use approval automatically lapses and is void. A new application and authorization is required before the conditional use may be re-established.

(Ord. 16-581.)

§ 5-409. Revocations, etc., of conditional use.

(a) *Attempted resolution*.

Whenever the Zoning Administrator learns of a violation of a condition, restriction, or limitation imposed under this subtitle, the Zoning Administrator must attempt to resolve the violation informally and promptly.

(b) *Notice of proposed action.*

(1) If the Zoning Administrator is unable to resolve the violation, the Zoning Administrator must issue a notice of proposed revocation to:

(i) the owners of record of the property, as shown on the tax records of Baltimore City;

(ii) the persons to whom the conditional use approval was granted or the current operator;

(iii) the owners of record of the properties immediately adjacent to the property; and

(iv) the community, neighborhood, or improvement association listed with the Department of Planning for the area in which the property lies.

(2) A copy of the notice must be provided to the Department of Planning.

(c) *Contents of notice.*

The notice must:

(1) specify the nature of the violation; and

(2) warn the recipient that, unless the violation is corrected within 30 days, or such other time as is specified in the notice, the matter will be referred to the Board of Municipal and Zoning Appeals for potential modification, suspension, or revocation of the conditional use.

(d) *How notice served.*

All notices must be served by 1 of the methods specified in § 19-207 {"Violation notice: Service"} of this Code.

(e) *Referral to Board.*

(1) If the violation is not corrected within the time specified, the Zoning Administrator must forward the record of this matter to the Board of Municipal and Zoning Appeals and request the Board to schedule a hearing.

(2) On receipt of the request, the Board of Municipal and Zoning Appeals must promptly schedule the matter for a hearing, to be held as soon as practicable.

(f) *Decision.*

(1) If, after notice to the parties and an opportunity to be heard, the Board of Municipal and Zoning Appeals finds that a condition, restriction, or limitation imposed under this subtitle has been violated, the Board may take any 1 or combination of the following actions:

(i) revoke the conditional use;

(ii) suspend the conditional use subject to completion of corrective action or other condition set by the Board; or

(iii) affirm the conditional use, subject to a schedule for corrective action, with provision for automatic termination if the schedule is not met.

(2) The Board's findings must be specifically documented in the record.

(Ord. 16-581; Ord. 17-015.)

SUBTITLE 5
LEGISLATIVE AUTHORIZATIONS

§ 5-501. "Legislative authorization" defined.

In this Code, "legislative authorization" means any ordinance that:

(1) amends the text of this Code, except as provided in § 5-502 {"Exception for corrective bills"} of this subtitle; or

(2) approves, authorizes, or amends a prior approval or authorization relating to 1 or more specific properties, including:

(i) a variance;

(ii) a conditional use;

(iii) a map amendment;

(iv) an educational campus master plan;

(v) a hospital general development plan;

(vi) an area of special sign control; and

(vii) a planned unit development.

(Ord. 16-581.)

§ 5-502. Scope of subtitle.

(a) *In general.*

This subtitle applies to all legislative authorizations created under authority of this Code.

(b) *Exception for corrective bills.*

This subtitle does not apply to any text amendment that:

(1) consists only of a change in punctuation, grammar, or spelling; and

(2) does not in any way alter the substance of this Code.

(Ord. 16-581.)

§ 5-503. *{Reserved}*

§ 5-504. Referrals.

Once a bill proposing a legislative authorization has been introduced, the City Council must refer the bill to the following for their written reports and recommendations:

(1) the Board of Municipal and Zoning Appeals;

(2) the Planning Commission;

(3) the Department of Transportation; and

(4) any other agencies that the City Council President specifies.

(Ord. 16-581; Ord. 17-015.)

§ 5-505. ***{Reserved}***

§ 5-506. Procedures on referral.

(a) *Planning Commission.*

(1) *Public hearing.*

The Planning Commission must consider the referred bill in a public hearing. Notice of the public hearing must be given in accordance with Title 5, Subtitle 6 {"Notices"} of this Code. Except as provided in subsection (e)(2) of this section, the hearing must be concluded no more than 60 days from the Commission's receipt of the referred bill.

(2) *Review standards.*

The Planning Commission must evaluate the bill in accordance with the standards in § 5-508 {"Approval standards"} of this subtitle.

(3) *Written recommendations – Required.*

Within 15 days of the close of the public hearing, the Planning Commission must:

(i) issue its written report and recommendations; and

(ii) forward its report and recommendations, together with all agency reports and recommendations received, to the applicant and to the City Council's Executive Secretary.

(4) *Written recommendations – Options.*

(i) For a text amendment, the Planning Commission may recommend approval, amendment, or denial of the application.

(ii) For a map amendment, the Planning Commission may recommend:

(A) approval or denial of the application;

(B) an alternative zoning designation than that applied for; or

(C) the removal or addition of properties from the application.

(b) *BMZA.*

Within 30 days of the bill's introduction, the Board of Municipal and Zoning Appeals must submit its written report and recommendation to the City Council, with a copy to the Zoning Administrator.

(c) *DoT for possible traffic mitigation.*

Within 15 business days of the bill's introduction, City Council must refer the bill and all accompanying documents to the Director of Transportation for review and, if required, traffic mitigation, as provided in § 5-201(d) {"Introduction: Traffic mitigation"} of this title, if:

(1) traffic-mitigation requirements have not already been complied with in accordance with this Code or the City Building, Fire, and Related Codes Article; and

(2) the proposed legislative authorization:

(i) is for property in a Traffic-Mitigation Zone designated in Building Code § 3805 {"Traffic-Mitigation Zones"} and involves 10 or more dwelling units;

(ii) involves 15,000 sq. ft. or more of gross floor area; or

(iii) involves 50 or more dwelling units.

(d) *Other agencies.*

Within 30 days of the bill's introduction, any other agencies to which the bill might have been referred must submit their written reports and recommendations to the City Council, with a copy to the Zoning Administrator.

(e) *Agency failure to report.*

(1) If an agency fails to submit its written report and recommendations within the period specified by this section, the City Council may proceed without that report and recommendations.

(2) However, the applicant may waive this time limit and consent to an extension of the reporting period by giving written notice of the waiver and consent to the President of the City Council, with copies to the Board of Municipal and Zoning Appeals, the Planning Commission, and the Zoning Administrator.

(Ord. 16-581.)

§ 5-507. Action by City Council.

(a) *Committee hearing.*

(1) The bill must be considered at a public hearing of a committee of the City Council. Notice of the public hearing must be given in accordance with Title 5, Subtitle 6 {"Notices"}.

(2) The committee must evaluate the bill in accordance with the standards in § 5-508 {"Approval standards"} of this subtitle.

(b) *Council options.*

The City Council may approve, amend, or disapprove any legislative authorization.

(c) *Rehearing on amendment.*

(1) Except as otherwise specified in this subsection, whenever a legislative authorization is amended:

(i) another public hearing must be held on the bill as amended; and

(ii) the requirements of this subtitle for notice and for agency reports apply to the additional hearing.

(2) An additional hearing is not required for:

(i) an amendment that consists only of a change in punctuation, grammar, or spelling and does not in any way alter the substance of the ordinance;

(ii) any other amendment that does not in any way alter the substance of the ordinance;

(iii) an amendment proposed in and approved by Committee; or

(iv) an amendment to a comprehensive rezoning if, for at least 14 days before any vote is taken on the amendment, a description of the amendment:

(A) has been provided to the Department of Legislative Reference and to the Department of Planning and by them made available for inspection and copying by the public; and

(B) has been posted on the Department of Planning's website.

(d) *Failure to approve.*

A bill proposing a legislative authorization is considered to have failed and the application denied if the City Council fails to act finally on the bill within 12 months from the earlier of:

(1) the date on which the last of the required agency reports and recommendations is received; and

(2) the last day of the agency reporting period, as set by this section.

(Ord. 16-581; 17-049.)

§ 5-508. Approval standards.

(a) *In general.*

Legislative authorizations must be evaluated by the Planning Commission and the City Council in accordance with the standards set forth in this section.

(b) *Map amendments.*

(1) *Required findings.*

As required by the State Land Use Article, the City Council may approve the legislative authorization based on a finding that there was either:

(i) a substantial change in the character of the neighborhood where the property is located; or

(ii) a mistake in the existing zoning classification.

(2) *Required findings of fact.*

In making the determination required by subsection (b)(1) of this section, the City Council must also make findings of fact that address:

(i) population changes;

(ii) the availability of public facilities;

(iii) present and future transportation patterns;

(iv) compatibility with existing and proposed development for the area;

(v) the recommendations of the City agencies and officials; and

(vi) the proposed amendment's consistency with the City's Comprehensive Master Plan.

(3) *Additional standards – General.*

Additional standards that must be considered for map amendments are:

(i) existing uses of property within the general area of the property in question;

(ii) the zoning classification of other property within the general area of the property in question;

(iii) the suitability of the property in question for the uses permitted under its existing zoning classification; and

(iv) the trend of development, if any, in the general area of the property in question, including changes, if any, that have taken place since the property in question was placed in its present zoning classification.

(4) *Additional standards – Rezoning from MI District.*

(i) To rezone land from the Maritime Industrial ("MI") District to any other zoning district, the Planning Commission must find that the proposed amendment:

(A) would be consistent with the City's Comprehensive Master Plan;

(B) would not impede, diminish, or preclude transportation access into or out of the Maritime Industrial District;

(C) would not result in or encourage a loss of existing deep water assets of the Maritime Industrial District;

(D) would not result in changes to the economic viability of adjacent maritime industrial land uses due to the encroachment of non-compatible uses;

(E) would not reduce or impede current or future maritime industrial economic development growth in the Maritime Industrial district;

(F) would establish an adequate physical separation that will buffer non-industrial land uses from maritime industrial uses; and

(G) would adhere with federal and state laws regarding homeland security, generally, and port safety, specifically.

(ii) If an application is filed to rezone property from the Maritime Industrial District, the Director of Planning must notify the Maryland Port Administration and any adjacent property owners of the application. At least 30 days before the Planning Commission hearings on the application, the Director of Planning must seek an opinion from the Maryland Port Administration on the application of the criteria listed in subparagraph (i) of this paragraph.

(c) *Text amendments.*

Standards that must be considered for text amendments are:

(1) the amendment's consistency with the City's Comprehensive Master Plan;

(2) whether the amendment would promote the public health, safety, and welfare;

(3) the amendment's consistency with the intent and general regulations of this Code;

(4) whether the amendment would correct an error or omission, clarify existing requirements, or effect a change in policy; and

(5) the extent to which the amendment would create nonconformities.

(Ord. 16-581.)

SUBTITLE 6
NOTICES

§ 5-601. Map or text amendments; PUDs.

(a) *Hearing required.*

For a bill proposing a zoning map amendment, a zoning text amendment, or the creation or modification of a planned unit development, the City Council committee to which the bill has been referred must conduct a hearing at which:

(1) the parties in interest and the general public will have an opportunity to be heard; and

(2) all agency reports will be reviewed.

(b) *Notice of hearing required.*

Notice of the hearing must be given by each of the following methods, as applicable:

(1) by publication in a newspaper of general circulation in the City;

(2) for the creation or modification of a planned unit development and for a zoning map amendment, other than a comprehensive rezoning:

(i) by posting in a conspicuous place on the subject property; and

(ii) by first-class mailing of a written notice, on forms provided by the Zoning Administrator, to each person who appears on the tax records of the City as an owner of the property to be rezoned; and

(3) for a comprehensive rezoning:

(i) by posting in conspicuous places within and around the perimeter of the subject area or district, as the Department of Planning designates; and

(ii) by first-class mailing of a written notice, on forms provided by the Zoning Administrator, to each person who appears on the tax records of the City as an owner of property within the subject area or district.

(c) *Contents of notice.*

The notice must include:

(1) the date, time, place, and purpose of the public hearing;

(2) the address of the subject property or a drawing or description of the boundaries of the area affected by the proposed rezoning; and

(3) the name of the applicant.

(d) *Number and manner of posted notices*.

(1) For a zoning map amendment or the creation or modification of a planned unit development, the number and manner of posting is as follows:

(i) for an individual property, at least 1 sign must be visible from each of the property's street frontages;

(ii) for a comprehensive rezoning, a change in the boundaries of a zoning district, or the creation or modification of a planned unit development, at least 2 or more signs are required, as the Department of Planning designates;

(iii) each sign must be posted at a prominent location, near the sidewalk or public right-of-way, so that it is visible to passing pedestrians and motorists;

(iv) a window-mounted sign must be mounted inside the window glass and placed so that it is clearly visible to passing pedestrians and motorists; and

(v) each sign must be at least 3 feet by 4 feet in size.

(2) Nothing in this subtitle prevents the voluntary posting of more notices than required by this subtitle.

(e) *Timing of notices – In general.*

The notice must be published, mailed, and, except as provided in subsection (f) of this section, posted:

(1) at least 15 days before the public hearing; or

(2) for a comprehensive rezoning, at least 30 days before the public hearing.

(f) *Timing of notices – Posting for map amendment or PUDs.*

For a zoning map amendment or the creation or modification of a planned unit development, the posted notice must be:

(1) posted at least 30 days before the public hearing; and

(2) removed within 48 hours after conclusion of the public hearing.

(g) *Additional notice for proposed rezoning in MI District.*

If an application is made to rezone any property in the MI District, the Director of Planning must notify the Maryland Port Administration and the owners of any adjacent property of the application.

(Ord. 16-581; Ord. 17-015.)

§ 5-602. Major variances; Conditional uses.

(a) *Hearing required.*

For major variances and conditional uses, the Board of Municipal and Zoning Appeals or the City Council, as the case may be, must conduct a hearing at which:

(1) the parties in interest and the general public will have an opportunity to be heard; and

(2) all agency reports will be read.

(b) *Notice of hearing required.*

Notice of the hearing must be given by posting in a conspicuous place on the subject property.

(c) *Contents of notice.*

The notice must include:

(1) the date, time, place, and purpose of the public hearing;

(2) the address of the subject property or a drawing or description of the boundaries of the area affected by the proposed variance or conditional use;

(3) the name of the applicant; and

(4) how additional information on the matter can be obtained.

(d) *Number and manner of posted notices*.

(1) The number and manner of posting is as follows:

(i) for an individual property, at least 1 sign must be visible from each of the property's street frontages;

(ii) each sign must be posted at a prominent location, near the sidewalk or public right-of-way, so that it is visible to passing pedestrians and motorists;

(iii) a window-mounted sign must be mounted inside the window glass and placed so that it is clearly visible to passing pedestrians and motorists; and

(iv) each sign must be at least 3 feet by 4 feet in size.

(2) Nothing in this subtitle prevents the voluntary posting of more notices than required by this subtitle.

(e) *Timing of notice.*

The posted notice must be:

(1) posted at least 21 days before the public hearing; and

(2) removed within 48 hours after conclusion of the public hearing.

(Ord. 16-581; Ord. 17-015.)

§ 5-603. Minor variances.

(a) *Notice of application required.*

Notice of an application for a minor variance must be given by posting in a conspicuous place on the subject property.

(b) *Contents of notice.*

The notice must include:

(1) the purpose of the application;

(2) the address of the subject property or a drawing or description of the boundaries of the area affected by the proposed rezoning;

(3) the name of the applicant; and

(4) where, how, and by when any objections must be filed.

(c) *Number and manner of posted notices*.

(1) The number and manner of posting is as follows:

(i) for a property with more than 1 street frontage, at least 1 sign must be visible from each street frontage;

(ii) each sign must be posted at a prominent location, near the sidewalk or public right-of-way, so that it is visible to passing pedestrians and motorists;

(iii) a window-mounted sign must be mounted inside the window glass and placed so that it is clearly visible to passing pedestrians and motorists; and

(iv) each sign must be at least 3 feet by 4 feet in size.

(2) Nothing in this subtitle prevents the voluntary posting of more notices than required by this subtitle.

(d) *Timing of notice.*

The posted notice must be:

(1) posted at least 10 days before the Zoning Administrator makes a decision on the application; and

(2) removed within 48 hours after a written decision is issued.

(Ord. 16-581; Ord. 17-015.)

§ 5-604. Planning Commission consideration of site-specific projects.

(a) *Hearing required*.

For any site-specific matter, the Planning Commission must conduct a public hearing at which:

(1) the parties in interest and general public will have an opportunity to be heard; and

(2) staff reports and recommendations will be read.

(b) *Notice of hearing*.

In addition to any other form of notice required by law or regulation, notice of the hearing must be given by posting in conspicuous places within and around the perimeter of the subject property or area.

(c) *Contents of notice*.

The posted notice must include:

(1) the date, time, place, and purpose of the hearing;

(2) the address of the subject property or a drawing or description of the boundaries of the subject area;

(3) the name and address of the applicant; and

(4) how additional information on the matter can be obtained.

(d) *Number and manner of posted notices*.

The number of posted notices and the manner of their posting are as follows:

(1) For a notice applicable only to an individual property, at least one sign must be visible from each of the property's street frontages.

(2) For a notice applicable to more than one property (e.g., a minor modification to a Planned Unit Development), at least 2 or more signs are required, as the Department of Planning designates.

(3) Each sign must be at least 3 feet by 4 feet in size.

(4) Each sign must be composed of waterproof materials sufficient to ensure the sign will last the required posting period (corrugated vinyl and polyurethane banner being acceptable).

(e) *Timing of notice*.

The posted notice must be:

(1) posted at least 10 days before the public hearing; and

(2) removed within 48 hours after conclusion of the hearing.

(f) *Copy of agenda to Councilmembers*.

At least 4 calendar days before any meeting of the Planning Commission, the Commission must deliver to each member of the City Council, by email or in person, an agenda of all matters that the Planning Commission proposes to consider at that meeting.

(Ord. 16-581; Ord. 17-015.)

§ 5-605. *{Reserved}*

§ 5-606. Responsibility for notices.

The notices required by this subtitle must be given by and at the expense of the following:

(1) the applicant, for applications initiated by or on behalf of a property owner; and

(2) the Mayor and City Council, for applications initiated by the City.

(Ord. 16-581.)

§ 5-607. Electronic notice.

Additional electronic notice by website or email for public hearings under this Code may be provided. This notice is discretionary, and any defect in or failure to strictly adhere to an electronic notice is not a basis for declaring any legislative authorization invalid or void.

(Ord. 16-581.)

SUBTITLE 7
USE PERMITS

§ 5-701. Purpose.

The purpose of this subtitle is to set out the requirements for obtaining a use permit.
(Ord. 16-581.)

§ 5-702. Nature of permit.

A use permit is a document issued for a structure or land that states that the use or occupancy of the structure or land:

(1) complies with the provisions of this Code; and

(2) is the authorized use for that structure or land.
(Ord. 16-581.)

§ 5-703. Authorization and issuance.

A use permit for a structure or land is:

(1) authorized by the Zoning Administrator; and

(2) issued by the Housing Commissioner.
(Ord. 16-581; Ord. 17-015.)

§ 5-704. When required.

A use permit is required before any person may:

(1) occupy any newly-constructed structure or any addition to a previously-constructed structure;

(2) use for any purpose any previously vacant land;

(3) make any change in the authorized use of any land or structure; or

(4) occupy any building that:

(i) has been unoccupied for more than 1 year; or

(ii) is subject to an outstanding vacant building notice.
(Ord. 16-581.)

§ 5-705. Procedure.

The procedure for authorizing and obtaining a use permit is as determined by the Housing Commissioner.
(Ord. 16-581; Ord. 17-015.)

SUBTITLE 8
ZONING CONSULTATIONS

§ 5-801. Purpose.

The consultation process provided for by this subtitle recognizes that the provisions of this Code, though detailed and extensive, cannot as a practical matter address every specific zoning issue. This process is thus intended to assist in clarifying the purpose and intent of the provisions of this Code. It is not intended, however, to permit adding to or changing the essential content of this Code.
(Ord. 16-581.)

§ 5-802. Who may request.

The following may request a consultation with the Zoning Administrator to assist in clarifying provisions of this Code:

(1) the owner of any property in the City;

(2) any person expressly authorized by a property owner in writing; or

(3) any Councilmember or other official of City government.
(Ord. 16-581.)

§ 5-803. Procedure.

On request under § 5-802 {"Who may request"} of this subtitle, the Zoning Administrator:

(1) must review the request; and

(2) may:

(i) ask for additional information;

(ii) provide the consultation requested; and

(iii) provide a written summary of the consultation results.
(Ord. 16-581.)

§ 5-804. Non-binding status of consultations.

(a) *In general.*

Zoning consultations are meant to provide advisory information about the application of the Zoning Code. Results of a consultation are not binding on the Zoning Administrator, the Board of Municipal and Zoning Appeals, the Planning Commission, or the Mayor and City Council when addressing questions that arise under this Code.

(b) *Disclaimer.*

All written summaries of consultations must include the following statement:

> "The results of any Zoning Code consultation provided under this subtitle are advisory only and are not binding on the Zoning Administrator, the Board of Municipal and Zoning Appeals, the Planning Commission, or the Mayor and City Council when making decisions on matters within the scope of their authority under the Zoning Code or any provision of federal, state, or local law or regulation."

(Ord. 16-581.)

SUBTITLE 9
ZONING VERIFICATIONS

§ 5-901. Purpose.

A zoning verification is a document issued by the Zoning Administrator, at an applicant's request and for the applicant's own use, that states whether a property complies with the use regulations or bulk and yard regulations of the district in which it is located. It is not required by this Code.
(Ord. 16-581; Ord. 17-015.)

§ 5-902. Procedure.

(a) *In general.*

(1) A zoning verification may be obtained from the Zoning Administrator, on application and payment of a fee for each request.

(2) Except as provided in paragraph (3) of this subsection, a separate application must be made for each individual lot of property.

(3) A community-managed open-space garden or farm need only pay the fee and submit an application for verification as a single lot, as long as the lots constituting that use are contiguous.

(b) *Required information.*

Each application must contain the following information:

(1) The block and lot number of the property;

(2) a description or definite street location of the property;

(3) The name and address of the present owner of the property; and

(4) the existing and any proposed use of the property.

(c) *Considerations.*

In issuing a zoning verification, the Zoning Administrator must consider both the use specified in the application submitted for the verification and the information contained in the Zoning Administrator's official records. A zoning verification that states a property is in compliance is limited by the accuracy of the information submitted by the applicant.
(Ord. 16-581.)

§ 5-903. City immune from liability.

Neither the Mayor and City Council of Baltimore, the Zoning Administrator, nor any of their officers, agents, or employees may be held liable to any person, under any circumstances, in

connection with or resulting from the issuance of any zoning verification or in connection with or resulting from any information or statement contained in any zoning verification.
(Ord. 16-581.)

{PAGE LEFT INTENTIONALLY BLANK}

TITLE 6
ZONING DISTRICTS; MAPS AND PROFILES

SUBTITLE 1
PURPOSE OF TITLE

§ 6-101. Purpose.

The purpose of this title is to outline the different zoning districts and the zoning map, floodplain overlay maps, and flood profiles subject to this Code.
(Ord. 16-581.)

SUBTITLE 2
ZONING DISTRICTS

§ 6-201. Establishment of districts.

To carry out the purposes of this Code, the City is divided into zoning districts, as listed in this subtitle and located on the zoning map, floodplain overlay maps, and flood profiles adopted under this Code.

(Ord. 16-581.)

§ 6-202. Open-Space and Environmental Districts.

The Open-Space and Environmental Districts are:

OS	Open-Space Zoning District
FP	Floodplain Overlay Zoning District
CBCA	Chesapeake Bay Critical Area Overlay Zoning District

(Ord. 16-581.)

§ 6-203. Detached and Semi-Detached Residential Districts.

The Detached and Semi-Detached Residential Districts are:

R-1A	Detached Residential Zoning District
R-1B	Detached Residential Zoning District
R-1C	Detached Residential Zoning District
R-1D	Detached Residential Zoning District
R-1E	Detached Residential Zoning District
R-1	Detached Residential Zoning District
R-2	Detached and Semi-Detached Residential Zoning District
R-3	Detached Residential Zoning District
R-4	Detached and Semi-Detached Residential Zoning District

(Ord. 16-581.)

§ 6-204. Rowhouse and Multi-Family Residential Districts.

The Rowhouse and Multi-Family Residential Districts are:

R-5	Rowhouse and Multi-Family Residential Zoning District
R-6	Rowhouse and Multi-Family Residential Zoning District
R-7	Rowhouse and Multi-Family Residential Zoning District
R-8	Rowhouse and Multi-Family Residential Zoning District
R-9	Rowhouse and Multi-Family Residential Zoning District
R-10	Rowhouse and Multi-Family Residential Zoning District

(Ord. 16-581.)

§ 6-205. Commercial Districts.

The Commercial Districts are:

C-1	Neighborhood Business Zoning District
C-1-E	Neighborhood Business and Entertainment Zoning District
C-1-VC	Neighborhood Business Zoning District (Village Center)
C-2	Community Commercial Zoning District
C-3	General Commercial Zoning District
C-4	Heavy Commercial Zoning District
C-5	Downtown District

(Ord. 16-581.)

§ 6-206. Industrial Districts.

The Industrial Districts are:

OIC	Office-Industrial Campus Zoning District
BSC	Bio-Science Campus Zoning District
I-MU	Industrial Mixed-Use Zoning District
I-1	Light Industrial Zoning District
I-2	General Industrial Zoning District
MI	Maritime Industrial Zoning District

(Ord. 16-581.)

§ 6-207. Special Purpose Districts.

The Special Use Districts are:

OR	Office-Residential Zoning District
TOD-1	Transit-Oriented Development District
TOD-2	Transit-Oriented Development District
TOD-3	Transit-Oriented Development District
TOD-4	Transit-Oriented Development District
EC	Educational Campus Zoning District
H	Hospital Campus Zoning District
T	Transportation Zoning District
W	Waterfront Overlay Zoning District
R-MU	Rowhouse Mixed-Use Overlay District
AU	Adult Use Overlay Zoning District
PC	Port Covington Zoning District

(Ord. 16-581.)

SUBTITLE 3
MAPS AND PROFILES

§ 6-301. Maps and profiles part of Code.

(a) *In general.*

The zoning map, floodplain overlay maps, and flood profiles adopted under this Code are incorporated in and made a part of this Code as fully as if they were set forth and described in this Code.

(b) *Evidence of authenticity*.

As evidence of the authenticity of these maps and profiles, each is to be signed by the Mayor and by the President of the City Council.

(c) *Digital format authorized.*

(1) The Zoning Administrator may convert these maps and profiles into, and maintain and periodically update them in, a geographic database or other digital format that is capable of depicting the zoning lines and designations in both electronic and printed forms.

(2) On certification by the Director of Transportation, the maps and profiles converted to a digital format under this subsection:

(i) are legalized for purposes of the Zoning Code of Baltimore City; and

(ii) may be taken by all public officials and others as evidence of the original maps and profiles adopted under this Code.

(Ord. 16-581.)

§ 6-302. Letter or letter-number designations.

The use on the zoning map of a letter or a letter-number combination to designate a district indicates that the regulations applying to that district extend throughout the whole area bounded by the district boundary lines, as determined by the provisions of § 6-303 {"Boundary line determination"} of this subtitle.

(Ord. 16-581.)

§ 6-303. Boundary line determination.

(a) *In general.*

The precise location of a zoning district boundary line is determined as specified in this section.

(b) *Along streets, alleys, streams, etc.*

Where a district boundary line is shown as being within or along a street, alley, other public or private way, or an extension of any of them, or as being within or along a non-navigable stream, the boundary is the center line of that street, alley, other way, extension, or stream.

(c) *On lot lines.*

Where a district boundary line is shown as along or superimposed on a lot line, the boundary is that lot line.

(d) *Designated distances.*

Where the location of a district boundary line is indicated by a designated number of feet, that distance controls.

(e) *Along railroad rights-of way.*

Where a district boundary line is shown as being within or along a railroad right-of-way, the boundary line of that railroad right-of-way controls.

(f) *Along navigable waters.*

Where a district boundary line is shown as along a navigable waterway and is not otherwise fixed, the boundary is:

(1) the line that coincides with the "pierhead line" (that is, the legal boundary beyond which artificial structures, such as piers, may not project); or

(2) where no pierhead line has been established, the line that coincides with the mean low tide line.

(g) *Reclaimed submerged land.*

Unless otherwise indicated on the zoning map, submerged land that is later reclaimed is in the same district as the non-submerged premises to which the reclaimed land is contiguous.

(h) *Others.*

Where a district boundary line is shown and its location is not fixed by any of the rules of this section, its precise location is determined by scaling from fixtures, objects, or other structures shown on the zoning map.

(Ord. 16-581.)

§ 6-304. Property divided by zoning district line.

Where a lot is divided into 2 or more parts by a zoning district line:

(1) for all purposes except density, each part must comply with all of the regulations applicable to its zoning classification; and

(2) for density purposes, the lot area computation of each part may be totaled and then distributed throughout the lot, without regard to the zoning lines.

(Ord. 16-581.)

SUBTITLE 4
{REPEALED BY ORD. 17-015}

TITLE 7
OPEN-SPACE AND ENVIRONMENTAL DISTRICTS

SUBTITLE 1
PURPOSE OF TITLE

§ 7-101. Purpose.

The purpose of this title is to set out the use regulations, bulk and yard regulations, and other standards for:

(1) Open-Space Zoning Districts;

(2) Floodplain Overlay Zoning Districts; and

(3) Chesapeake Bay Critical Area Overlay Zoning District.

(Ord. 16-581.)

SUBTITLE 2
OPEN-SPACE ZONING DISTRICTS

§ 7-201. Purpose of Open-Space Districts.

(a) *In general.*

The purpose of the Open-Space ("OS") Zoning District is to enhance the quality of life for City residents by permanently preserving public open space as an important public asset and critical environmental infrastructure.

(b) *Regulatory intent.*

The regulations for this district are intended to:

(1) protect and promote public and private open space;

(2) provide public reflective, cultural, educational, and recreational opportunities;

(3) enhance the urban environment;

(4) provide pedestrian and bicycle transportation connections;

(5) encourage neighborhood investment in and stewardship of natural green spaces and native flora and fauna;

(6) protect and enhance natural resources, including forests, habitat, and water quality; and

(7) ensure the environmental benefits of adequate light, air, and water in City neighborhoods.

(c) *Application.*

The Open-Space District applies to public and private open space properties and cemeteries.
(Ord. 16-581.)

§ 7-202. Use regulations.

Only those uses of land listed in *Table 7-202: Open-Space Districts – Permitted and Conditional Uses* are allowed within an Open-Space Zoning District.
(Ord. 16-581; Ord. 17-015.)

§ 7-203. Bulk and yard regulations.

(a) *In general.*

Table 7-203: Open-Space Districts – Bulk and Yard Regulations sets forth the applicable bulk and yard regulations for an Open-Space Zoning District.

(b) *Measurement methodologies; Exceptions, etc.*

(1) Measurement methodologies are as set forth in Title 15, Subtitle 3 {"Measurement Methodologies"} of this Code.

(2) Exceptions and requirements are as set forth in Title 15, Subtitle 4 {"Exceptions and Requirements"} of this Code.

(Ord. 16-581.)

§ 7-204. Other applicable standards.

(a) *In general.*

The Open-Space Zoning District is also subject to the standards identified in this section.

(b) *Accessory structures and uses.*

Standards governing accessory structures and uses are as set forth in Title 15, Subtitle 5 {"Accessory Structures and Uses"} of this Code.

(c) *Site development standards.*

On-site development standards are set forth in Title 15 {"Site Development Standards"} of this Code.

(d) *Off-Street parking and loading.*

Standards governing off-street parking and loading are as set forth in Title 16 {"Off-Street Parking and Loading"} of this Code.

(e) *Landscaping and screening.*

All landscaping and screening must comply with the requirements of the Baltimore City Landscape Manual.

(f) *Signs.*

Sign standards are as set forth in Title 17 {"Signs"} of this Code.

(g) *Temporary uses.*

Standards governing temporary uses are as set forth in Title 14, Subtitle 4 {"Temporary-Use Standards"} of this Code.

(Ord. 16-581; Ord. 17-015.)

SUBTITLE 3
FLOODPLAIN OVERLAY ZONING DISTRICT

§ 7-301. Definitions.

(a) *In general.*

In this subtitle, the following terms have the meanings indicated.

(b) *Floodplain.*

"Floodplain" has the meaning stated in City Code Article 7 {"Natural Resources"}, § 1-2(v) {"Definitions: Floodplain"}.

(c) *Floodplain maps.*

"Floodplain maps" means the series of maps and profiles known as the Flood Insurance Rate Maps and Flood Insurance Study for the City of Baltimore, dated February 2, 2012, as prepared, revised, or amended from time to time for the Federal Emergency Management Agency, Flood Insurance Administrator in accordance with City Code Article 7, Division I {"Floodplain Management"}.

(d) *Floodplain Overlay Zoning District; Overlay District.*

"Floodplain Overlay Zoning District" or "Overlay District" means all areas shown as floodplains on the floodplain maps.

(Ord. 16-581.)

§ 7-302. Purpose of Floodplain Overlay District.

The Floodplain ("FP") Overlay Zoning District regulates the placement and use of structures and the use of land in the floodplain, with the design towards:

(1) protecting human life and health;

(2) minimizing damage to public and private property;

(3) preventing or minimizing future flood damage;

(4) protecting the public water supply and sanitary sewage disposal systems;

(5) preserving natural drainage systems; and

(6) reducing financial burdens imposed on the City and its citizens.

(Ord. 16-581.)

§ 7-303. Overlay subdistricts.

(a) *In general.*

The Floodplain Overlay Zoning District is divided into the following 6 subdistricts, each designating a measurable degree of flood hazard, as delineated on the floodplain maps.

(b) *Floodway.*

The Floodway comprises that part of the Overlay District that is described in City Code Article 7, § 2-2(b) {"Subdistricts: Floodway"}.

(c) *Floodway Fringe.*

The Floodway Fringe comprises those lands within the Overlay District that are described in City Code Article 7, § 2-2(c) {"Subdistricts: Floodway Fringe"}.

(d) *Approximated Floodplain.*

The Approximated Floodplain comprises those lands within the Overlay District that are described in City Code Article 7, § 2-2(d) {"Subdistricts: Approximated Floodplain"}.

(e) *Coastal Floodplain.*

The Coastal Floodplain comprises those lands within the Overlay District that are described in City Code Article 7, § 2-2(e) {"Subdistricts: Coastal Floodplain"}.

(f) *Coastal High Hazard Area.*

The Coastal High Hazard Area comprises those lands within the Overlay District that are described in City Code Article 7, § 2-2(f) {"Subdistricts: Coastal High Hazard Area"}.

(g) *Flood Resilience Area.*

The flood resilience area comprises those lands within the Overlay District that are described in City Code Article 7, § 2-2(g) {"Subdistricts: Flood Resilience Area"}.

(Ord. 16-581.)

§ 7-304. Use regulations.

(a) *In general.*

(1) *Per underlying district.*

Except as otherwise specifically limited or prohibited by this section or by other applicable law (*See* § 7-309 of this subtitle), all uses allowed in a Floodplain Overlay Zoning District are as otherwise provided in this Code for the underlying zoning district.

(2) *Conditional uses.*

In addition to the general requirements of this Code governing conditional uses, a conditional use in a Floodplain Overlay District is subject to the standards and procedures contained in § 7-306 {"Variances and conditional uses"} of this subtitle.

(b) *Floodway.*

The only uses allowed in the Floodway are the following recreational facilities, but not including accessory buildings:

(1) athletic fields;

(2) golf courses; and

(3) parks.

(c) *Public utility or government office.*

Notwithstanding any other provision to the contrary, no public utility or government service use may be located in any floodplain if it:

(1) might impede, retard, or change the direction of the flow of water;

(2) will catch or collect debris carried by the water; or

(3) is placed where the natural flow of the stream or floodwaters would carry it downstream to the damage or detriment of any public or private property in or adjacent to the floodplain.

(Ord. 16-581.)

§ 7-305. Bulk and yard regulations.

(a) *In general.*

The bulk and yard regulations applicable to properties in a Floodplain Overlay Zoning District are as otherwise provided in this Code for the underlying zoning district.

(b) *Variances.*

In addition to the general requirements of this Code governing variances, a variance in a Floodplain Overlay Zoning District is subject to the standards and procedures contained in § 7-306 {"Variances and conditional uses"} of this subtitle**.**

(Ord. 16-581.)

§ 7-306. Variances and conditional uses.

(a) *Standards for substantial improvements or new construction.*

(1) In addition to the other requirements of this Code governing variances and conditional uses, the additional standards specified in paragraph (2) of this subsection apply to any variance or conditional use that involves any substantial improvement or new construction in a Floodplain Overlay Zoning District.

(2) All variances and conditional uses described in paragraph (1) of this subsection are subject to the following additional standards:

(i) the variance or conditional use will not result in increased flood heights or additional danger to the public health, safety, or welfare;

(ii) the proposal is consistent with the need to minimize flood damage;

(iii) all necessary permits have been received from the appropriate state and federal agencies;

(iv) all public and private utilities and facilities (including sewer, water, telephone, electric, gas, etc.) are located and constructed to minimize or eliminate flood damage;

(v) adequate drainage is provided to reduce exposure to flood hazard; and

(vi) the variance or conditional use is necessary because of extraordinary circumstances in local conditions that render the application of certain standards a severe hardship.

(b) *Warning letters.*

If the Board of Municipal and Zoning Appeals grants a variance or conditional use under this section, the Board must attach to its decision a warning that:

(1) construction below the base flood level may result in increased premium rates for flood insurance; and

(2) construction below the base flood level increases risks to life and property.

(Ord. 16-581; Ord. 17-015.)

§ 7-307. *{Reserved}*

§ 7-308. Municipal and personal liability.

A zoning authorization for property that is near a delineated floodplain or near any other land later discovered to be a floodplain:

(1) is not a representation, guarantee, or warranty of any kind that the property is not in a floodplain; and

(2) may not be used to impose any liability on the City, its elected or appointed officials, or its employees.

(Ord. 16-581.)

§ 7-309. Other applicable laws.

The Floodplain Overlay Zoning District is also subject to the standards, limitations, and prohibitions set forth in other applicable laws governing floodplains and flood hazard areas, including:

(1) City Code Article 7, Division I {"Floodplain Management"}; and

(2) the City Building, Fire, and Related Codes Article.

(Ord. 16-581.)

SUBTITLE 4
CHESAPEAKE BAY CRITICAL AREA OVERLAY ZONING DISTRICT

§ 7-401. Purpose of Critical Area Overlay District.

The Chesapeake Bay Critical Area ("CBCA") Overlay District is designed to foster more sensitive, consistent, and uniform development and redevelopment activity along the City's shoreline areas of the Chesapeake Bay and its tributaries, so as to minimize damage to water quality and natural or established habitats for the benefit of current and future generations.
(Ord. 16-581.)

§ 7-402. Definitions.

(a) *In general.*

In this subtitle, the following terms have the meanings indicated.

(b) *Buffer.*

(1) *In general.*

"Buffer" has the meaning stated in State Natural Resources Article § 8-1802(a)(4) {"Critical Area Protection Program: Definitions"}, as amplified by COMAR 27.01.01.01B(8).

(2) *Delineation.*

The Buffer is generally the first 100 feet landward of mean high tide in the Critical Area, as measured from existing conditions on site. Steep slopes, erodible soils, wetlands, and other environmental conditions can alter the shape and increase the size of the buffer.

(c) *Critical area.*

(1) *In general.*

"Critical area" means all parts of the Chesapeake Bay Critical Area, as delineated in and as modified by the City under State Natural Resources Article § 8-1807 {"Critical Area Protection Program: Lands included"} and COMAR 27.01.01.01B(18), that fall within City boundaries.

(2) *Delineation.*

The Critical Area is generally all land within 1,000 feet of tidally affected water.

(d) *Critical Area Management Program.*

"Critical Area Management Program" means the Baltimore City Critical Area Management Program, as adopted by Resolution of the Mayor and City Council of Baltimore and approved by the Chesapeake Bay Critical Area Commission.

(e) *Development.*

(1) *In general.*

"Development" means any activity that materially affects the use of dry land, land under water, or any structure.

(2) *Inclusions.*

"Development" includes any one or a combination of the following:

(1) construction, reconstruction, modification, expansion, or demolition of structures;

(2) placement of fill;

(3) dredging;

(4) drilling;

(5) mining;

(6) grading;

(7) paving;

(8) land excavation;

(9) land clearing;

(10) land improvement; or

(11) storage of materials.

(f) *Disturb.*

(1) *In general.*

"Disturb" means to alter or change land in any way.

(2) *Inclusions.*

"Disturb" includes any amount of clearing, grading, or construction activity.

(g) *Significant development.*

"Significant development" means any development that would:

(1) disturb any land in the Buffer;

(2) disturb 10,000 or more square feet of land in the Critical Area;

(3) result in any disturbance, caused by use, development, or destruction of vegetation, to land in an area designated under the Critical Area Management Program as a Habitat Protection Area; or

(4) involve an expenditure for improvements to the property equal to or greater than 50% of the assessed value of the property, as recorded in the State Department of Assessment and Taxation's database.

(h) *Water-dependent facilities.*

(1) *In general.*

"Water-dependent facilities" means land uses or structures that:

(i) are associated with industrial, maritime, recreational, educational, or fisheries activities;

(ii) require a location within the Buffer near the shoreline; and

(iii) are dependent on the water by reason of the intrinsic nature of their operation.

(2) *Inclusions.*

"Water-dependent facilities" include:

(i) ports;

(ii) intake and outfall structures of power plants;

(iii) industries that withdraw water from surface waters regulated by this State, requiring a Water Appropriation and Use Permit from the Maryland Department of the Environment;

(iv) marinas and other boat-docking structures;

(v) public beaches and water-oriented recreation areas; and

(vi) fisheries.

(3) *Exclusions.*

"Water-dependent facilities" does not include private piers that are installed and maintained by riparian landowners and are not part of a subdivision that provides community piers.
(Ord. 16-581.)

§ 7-403. Designation of Critical Area.

The Chesapeake Bay Critical Area Act (State Natural Resources Article Title 8, Subtitle 18) requires the City to designate as its Critical Area an area that consists of, at a minimum:

(1) all waters of and land under the Chesapeake Bay and its tributaries to the head of the tide, as indicated on the State Wetland Maps;

(2) all State and private wetlands designated under State Environment Article Title 16; and

(3) all land and water areas within 1,000 feet beyond the landward boundaries of state or private wetlands and the heads of the tides.

(Ord. 16-581.)

§ 7-404. Development areas.

(a) *In general.*

State law requires the City to designate "Development Areas" within the Chesapeake Bay Critical Area ("CBCA"), based generally on existing development patterns and densities.

(b) *Types Designated.*

The 2 types of Development Areas specified in the Critical Area Management Program are:

(1) Resource Conservation Areas; and

(2) Intensely Developed Areas, which comprise two 2 subareas:

(i) Waterfront Revitalization Areas; and

(ii) Waterfront Industrial Areas.

(Ord. 16-581.)

§ 7-405. Maps.

(a) *Boundaries delineated on maps.*

(1) The boundaries of the Critical Area, the Buffer, and the Development Areas are delineated on a series of maps maintained by the Baltimore City Department of Planning.

(2) In addition to the requirements of Title 5, Subtitle 5 {"Legislative Authorizations"} of this Code, amendments to these maps must be reviewed and approved by:

(i) the Planning Commission; and

(ii) the Chesapeake Bay Critical Area Commission.

(b) *Digital format Authorized.*

(1) With the approval of the Chesapeake Bay Critical Area Commission, the Planning Commission may convert these maps into, and maintain and periodically update them in, a geographic database or other digital format that is capable of depicting the boundaries and designations in both electronic and printed forms.

(2) The maps converted to a digital format under this section:

(i) are legalized for purposes of the Zoning Code of Baltimore City; and

(ii) may be taken by all public officials and others as evidence of the original maps adopted under this subtitle and the Baltimore City Critical Area Management Program.

(c) *Other depictions illustrative only.*

Any other representation of the Critical Area, Buffer, or Development Areas, regardless of the source of publication, are illustrative only and may not be used for determining any of the development requirements or restrictions required in this subtitle or by the Critical Area Management Program.

(Ord. 16-581.)

§ 7-406. Prohibited uses.

(a) *Scope.*

The uses prohibited by this section are in addition to those prohibited by§ 1-218 {"Uses prohibited citywide"} of this Code.

(b) *Within Critical Area.*

Except as specified in subsection (d) of this section, the following uses are prohibited within the Critical Area:

(1) a dwelling unit or other non-water dependent structure on a pier, wharf, dock, walkway, bulkhead, breakwater, piles, or other similar structure, except as authorized under State Natural Resources Article § 8-1808.4 {"Critical Area Protection Program: Nonwater-dependent projects"};

(2) collection, storage, handling, or disposal of hazardous or toxic materials, as defined in COMAR 11.07.01.01A;

(3) industrial landfills;

(4) liquefied natural gas and petroleum gas terminals;

(5) maintenance, dismantling, or storage of abandoned, unlicensed, junked, or derelict vehicles or vehicle parts;

(6) non-water dependent uses on barges in tidal waters, except maritime museums;

(7) non-water dependent uses on permanently moored vessels in the Inner Harbor Basin, except maritime museums;

(8) recycling collection stations;

(9) solid waste acceptance facilities, as defined in City Code Article 23, except for facilities approved as a conditional use under this subtitle; and

(10) storage and handling of radioactive waste.

(c) *Within Buffer*.

Except as specified in subsection (d) of this section, the following additional uses are prohibited within the buffer:

(1) cement plants;

(2) chemical plants;

(3) sand or gravel extraction operations; and

(4) storage facilities for nutrients – that is, elements or compounds essential as raw material for organic growth and development (for example, carbon, nitrogen, and phosphorus).

(d) *Exceptions.*

The prohibitions in subsections (b) and (c) of this section do not apply if the following standards are met:

(1) on recommendation of the Department of Planning, the Board of Municipal and Zoning Appeals finds both that:

(i) there is no environmentally acceptable alternative outside the Critical Area; and

(ii) the use is needed to correct an existing water quality or wastewater management problem; and

(2) for any new use that constitutes a significant development or for any expansion of a nonconforming use, a best management practices plan that will achieve a net improvement in water quality and habitat is submitted and implemented as a requirement of the Critical Area review process.

(Ord. 16-581.)

§ 7-407. Resource Conservation Area.

(a) *Water-dependent facilities prohibited.*

Non-public water-dependent facilities are prohibited in Resource Conservation Areas.

(b) *Permitted and accessory uses outside Buffer.*

In a Resource Conservation Area outside the Buffer, permitted and accessory uses are:

(1) open space;

(2) public recreation;

(3) natural parks;

(4) pedestrian easements;

(5) bike paths; and

(6) cultural and historical sites.

(c) *Permitted and accessory uses within Buffer*

In a Resource Conservation Area within the Buffer, permitted and accessory uses are areas for passive recreation, such as nature study and education, but service facilities for these areas must be located outside of the Buffer.

(d) *Conditional uses outside Buffer.*

In a Resource Conservation Area outside the Buffer, conditional uses are public facilities.

(e) *Conditional uses within Buffer.*

In a Resource Conservation Area within the Buffer, conditional uses are public water-dependent facilities.

(Ord. 16-581.)

§ 7-408. Intensely Developed Areas – Waterfront Revitalization.

(a) *Permitted and accessory uses outside Buffer.*

In a Waterfront Revitalization Area outside the Buffer, permitted and accessory uses are as otherwise provided in this Code for the underlying zoning district, subject to the provisions of § 7-406 {"Prohibited uses"} of this subtitle.

(b) *Permitted and accessory uses within Buffer.*

In a Waterfront Revitalization Area within the Buffer, permitted and accessory uses are as otherwise provided in this Code for the underlying zoning district, subject to the provisions of § 7-406 {"Prohibited Uses"} and § 7-410 {"Intensely Developed Areas – Water-dependent facilities within Buffer"} of this subtitle.

(c) *Conditional uses outside Buffer.*

In a Waterfront Revitalization Area outside the Buffer, conditional uses are as otherwise provided in this Code for the underlying zoning district, subject to the provisions of § 7-406 {"Prohibited uses"} of this subtitle.

(d) *Conditional uses within Buffer.*

In a Waterfront Revitalization Area within the Buffer, conditional uses are as otherwise provided in this Code for the underlying zoning district, subject to the provisions of § 7-406 {"Prohibited uses"} and § 7-410 {"Intensely Developed Areas – Water-dependent facilities within Buffer"} of this subtitle.

(Ord. 16-581.)

§ 7-409. Intensely Developed Areas – Waterfront Industrial.

(a) *Permitted and accessory uses outside Buffer.*

In a Waterfront Industrial Area outside the Buffer, permitted and accessory uses are as otherwise provided in this Code for the underlying zoning district, subject to the provisions of § 7-406 {"Prohibited uses"} of this subtitle.

(b) *Permitted and accessory uses within Buffer.*

In a Waterfront Industrial Area within the Buffer, permitted and accessory uses are as otherwise provided in this Code for the underlying zoning district, subject to the provisions of § 7-406 {"Prohibited Uses"} and § 7-410 {"Intensely Developed Areas – Water-dependent facilities within Buffer"} of this subtitle.

(c) *Conditional uses outside Buffer.*

(1) In a Waterfront Industrial Area outside the Buffer, conditional uses are as otherwise provided in this Code for the underlying zoning district, subject to the provisions of § 7-406 {"Prohibited uses"} of this subtitle.

(2) Solid-waste acceptance facilities of the following types require conditional-use approval: waste-to-energy facilities, indoor-operated transfer facilities, and indoor-operated composting facilities, such as "in-vessel" composting facilities. If the use entails any significant development, the Board of Municipal and Zoning Appeals must find, as a condition of its approval, that a best management practices plan that will achieve a net improvement in water quality and habitat is submitted and implemented as a requirement of the Critical Area review process.

(d) *Conditional uses within Buffer.*

In a Waterfront Industrial Area within the Buffer, conditional uses are as otherwise provided in this Code for the underlying zoning district, subject to the provisions of § 7-406 {"Prohibited Uses"} and § 7-410 {"Intensely Developed Areas – Water-dependent facilities within Buffer"} of this subtitle.

(Ord. 16-581.)

§ 7-410. Intensely Developed Areas – Water-dependent facilities within Buffer.

In Intensely Developed Areas, water-dependent facilities are allowed in the Buffer only if all of the following standards are met:

(1) the use and project meet a recognized private right or public need;

(2) adverse effects on water quality and on fish, plant, and wildlife habitats are minimized and equivalent offsets have been made;

(3) to the extent possible, all associated non-water-dependent uses and structures are located outside the Buffer; and

(4) the facilities meet the requirements of the Critical Area Management Program, the Critical Area Development Manual, and the State law and regulations governing the Critical Area.

(Ord. 16-581.)

§ 7-411. Public utility and government services.

Notwithstanding any other provision to the contrary, every significant development of public utilities or governmental services within the Critical Area is subject to the special requirements and restrictions of the Critical Area Management Program.

(Ord. 16-581.)

§ 7-412. Abandoned uses.

Any use in the Critical Area Overlay District that is discontinued for 12 consecutive months:

(1) is considered abandoned; and

(2) may not be reestablished in the Critical Area unless, on recommendation of the Department of Planning, the Board of Municipal and Zoning Appeals finds that the use complies with the Critical Area Management Program.

(Ord. 16-581.)

§ 7-413. Bulk and yard regulations.

Properties in the Critical Area Overlay District are subject to:

(1) the bulk and yard regulations in the underlying zoning district; and

(2) to the extent that they are more restrictive, the lot coverage limitations imposed by the Critical Area Management Program.

(Ord. 16-581.)

§ 7-414. Variances and conditional uses.

(a) *In general.*

In addition to the general requirements of this Code governing variances and conditional uses, a variance or conditional use in the Critical Area is subject to the standards and procedures of:

(1) State Natural Resources Article Title 8, Subtitle 18;

(2) COMAR Title 27;

(3) the Critical Area Management Program; and

(4) this section.

(b) *Existing violations.*

No conditional use or variance may be granted to authorize a then-existing violation except as authorized in State Natural Resources Article § 8-1808 {"Critical Area Protection Program: Program development..."}.

(c) *Considerations, presumptions, and burden of proof.*

(1) In considering an application for a conditional use or variance, the Planning Department and the Board of Municipal and Zoning Appeals must presume that the specific development activity for which a conditional use or variance is required does not conform with the general purpose and intent of State Natural Resources Article, Title 8, Subtitle 18, the general purpose and intent of COMAR Title 27, or the requirements of the Critical Area Management Program.

(2) If the request for a conditional use or variance is based on conditions or circumstances that are the result of actions by the applicant, including the commencement of development activity before an application is filed, the Board of Municipal and Zoning Appeals may consider that fact.

(3) An applicant has the burden of proof and the burden of persuasion to overcome the presumption of nonconformance established by paragraph (1) of this subsection.

(4) The Board of Municipal and Zoning Appeals must make written findings as to whether, based on competent and substantial evidence, the applicant has overcome this presumption.

(5) With due regard for the person's experience, technical competence, and specialized knowledge, the findings may be based on evidence introduced and testimony presented by either:

(i) the applicant.

(ii) the City or any other government agency; and

(iii) any other person considered appropriate by the Board of Municipal and Zoning Appeals.

(d) *Applications.*

The Board of Municipal and Zoning Appeals must furnish copies of all applications for a conditional use or variance to the Planning Department and the Chesapeake Bay Critical Area Commission.

(e) *Findings – Planning Department.*

The Planning Department must find both that:

(1) special conditions or circumstances exist that are peculiar to the land or structure for which the application is made; and

(2) a literal enforcement of the requirements of the Critical Area Management Program would result in the applicant's being denied reasonable and significant use of the entire parcel or lot for which the conditional use or variance is requested.

(f) *Findings – Board of Municipal and Zoning Appeals.*

In addition, the Board of Municipal and Zoning Appeals must find that all of the following standards are met:

(1) a literal interpretation of the Critical Area Management Program, the State Chesapeake Bay Critical Area law, or related regulations will deprive the applicant of rights commonly enjoyed by other properties in similar areas within the Critical Area;

(2) the granting of a conditional use or variance will not confer on the applicant any special privilege that would be denied under the Critical Area Management Program, the Chesapeake Bay Critical Area law, or related regulations to other lands or structures within the Critical Area;

(3) the granting of a conditional use or variance will not adversely affect water quality or adversely impact fish, wildlife, or plant habitats within either the Critical Area or any other protected part of the State Chesapeake Bay Critical Area within a neighboring jurisdiction;

(4) the granting of a conditional use or variance will be in harmony with the general spirit and intent of the Critical Area Management Program, the State Chesapeake Bay Critical Area law, and related regulations; and

(5) the application for the conditional use or variance either:

(i) is not based on conditions or circumstances that are the result of the applicant's own actions; or

(ii) does not arise from any condition that relates to a land or building use, whether nonconforming or otherwise allowed, on any neighboring property.

(Ord. 16-581.)

§ 7-415. Civil penalties.

(a) *Authority and Scope.*

(1) This section is enacted by authority of State Natural Resources Article § 8-1808(c)(1)(iii)14.

(2) This section applies in addition to any other civil or criminal penalty authorized by State or City law.

(b) *Administrator may impose.*

Any person who violates a provision of this subtitle, of the Critical Area Management Program, or of any rule or regulation adopted under them, including any contractor, property owner, or other person who authorizes or who assists or participates in the violation, is subject to the imposition by the Zoning Administrator of a civil fine of up to $1,000 for each offense.

(c) *Each day a separate offense.*

Each day that a violation continues is a separate offense.

(d) *Considerations.*

In determining the amount of the penalty to be imposed under this section, the Zoning Administrator must consider the following:

(1) the gravity of the violation;

(2) any willfulness or negligence involved in the violation;

(3) the environmental impact of the violation; and

(4) the cost of restoring and mitigating the damage to the resource affected by the violation, including the cost to the State or the City for performing, supervising, or rendering assistance to the restoration and mitigation.

(e) *Procedures.*

The procedures for imposing the fine and for providing notice and an opportunity to be heard are as set forth in the Administrative Enforcement Procedures of the Critical Area Management Program.

(Ord. 16-581.)

{PAGE LEFT INTENTIONALLY BLANK}

TITLE 8
DETACHED AND SEMI-DETACHED RESIDENTIAL DISTRICTS

SUBTITLE 1
PURPOSE OF TITLE

§ 8-101. Purpose.

The purpose of this title is to set out the use regulations and the bulk and yard regulations for Detached and Semi-Detached Residential Districts.
(Ord. 16-581.)

SUBTITLE 2
DISTRICT DESCRIPTIONS

§ 8-201. Common standards.

(a) *Residential development.*

In the districts described in this subtitle, residential development is limited to 1 single-family dwelling unit per lot.

(b) *Residential conversions.*

In any of the districts subject to this title, the conversion of a single-family dwelling to a multi-family dwelling is prohibited.

(Ord. 16-581.)

§ 8-202. R-1A Detached Residential District.

The R-1A Detached Residential Zoning District is intended for neighborhoods of detached dwellings located on large lots of at least 2 acres in areas of countryside character, where environmental sensitivity is required during development to preserve natural features and where transportation access is more limited.

(Ord. 16-581.)

§ 8-203. R-1B Detached Residential District.

The R-1B Detached Residential Zoning District is intended for neighborhoods of detached dwellings located on large lots of at least 1 acre in areas of countryside character, where environmental sensitivity is required during development to preserve natural features and where transportation access is more limited.

(Ord. 16-581.)

§ 8-204. R-1C Detached Residential District.

The R-1C Detached Residential Zoning District is intended for neighborhoods of detached dwellings located on large lots of at least 21,780 square feet in areas of established low density development.

(Ord. 16-581.)

§ 8-205. R-1D Detached Residential District.

The R-1D Detached Residential Zoning District is intended for low density neighborhoods of detached dwellings located on lots of at least 14,520 square feet.

(Ord. 16-581.)

§ 8-206. R-1E Detached Residential District.

The R-1E Detached Residential Zoning District is intended for neighborhoods of detached dwellings located on lots of at least 9,000 square feet.

(Ord. 16-581.)

§ 8-207. R-1 Detached Residential District.

The R-1 Detached Residential Zoning District is intended for neighborhoods of detached dwellings located on lots of at least 7,300 square feet.
(Ord. 16-581.)

§ 8-208. R-2 Detached and Semi-Detached Residential District.

The R-2 Detached and Semi-Detached Residential Zoning District is intended for residential neighborhoods that accommodate both detached and semi-detached dwellings located on lots of at least 5,000 square feet.
(Ord. 16-581.)

§ 8-209. R-3 Detached Residential District.

The R-3 Detached Residential Zoning District is intended for neighborhoods of detached dwellings located on lots of at least 5,000 square feet.
(Ord. 16-581.)

§ 8-210. R-4 Detached and Semi-Detached Residential District.

The R-4 Detached and Semi-Detached Residential Zoning District is intended for neighborhoods that accommodate detached and semi-detached dwellings located on lots of at least 3,000 square feet.
(Ord. 16-581.)

SUBTITLE 3
USE REGULATIONS

§ 8-301. As listed in Table 8-301.

Only those uses of land listed in *Table 8-301: Detached and Semi-Detached Residential Districts – Permitted and Conditional Uses* are allowed within these zoning districts.
(Ord. 16-581.)

SUBTITLE 4
BULK AND YARD REGULATIONS

§ 8-401. In general.

Table 8-401: Detached and Semi-Detached Residential Districts – Bulk and Yard Regulations sets forth the applicable bulk and yard regulations for these zoning districts.
(Ord. 16-581.)

§ 8-402. Measurement methodologies; Exceptions, etc.

(a) *Measurement methodologies.*

Measurement methodologies are as set forth in Title 15, Subtitle 3 {"Measurement Methodologies"} of this Code.

(b) *Exceptions and requirements.*

Exceptions and requirements are as set forth in Title 15, Subtitle 4 {"Exceptions and Requirements"} of this Code.
(Ord. 16-581.)

SUBTITLE 5
{RESERVED}

SUBTITLE 6
OTHER APPLICABLE STANDARDS

§ 8-601. In general.

The Detached and Semi-Detached Residential Zoning Districts are also subject to the standards listed in this subtitle.
(Ord. 16-581.)

§ 8-602. Accessory structures and uses.

Standards governing accessory structures and uses are set forth in Title 15, Subtitle 5 {"Accessory Structures and Uses"} of this Code.
(Ord. 16-581.)

§ 8-603. Site development.

On-site development standards are set forth in Title 15 {"Site Development Standards"} of this Code.
(Ord. 16-581; Ord. 17-015.)

§ 8-604. Off-street parking and loading.

Standards governing off-street parking and loading are set forth in Title 16 {"Off-Street Parking and Loading"} of this Code.
(Ord. 16-581.)

§ 8-605. Design standards.

All developments of the type described in § 4-405 {"Design Review: Applicability"} of this Code must comply with the applicable design standards required by the Baltimore City Design Manual.
(Ord. 16-581.)

§ 8-606. Landscaping and screening.

All landscaping and screening must comply with the requirements of the Baltimore City Landscape Manual.
(Ord. 16-581; Ord. 17-015.)

§ 8-607. Signs.

Standards governing signs are set forth in Title 17 {"Signs"} of this Code.
(Ord. 16-581.)

§ 8-608. Temporary uses.

Standards governing temporary uses are set forth in Title 14, Subtitle 4 {"Temporary-Use Standards"} of this Code.
(Ord. 16-581.)

{PAGE LEFT INTENTIONALLY BLANK}

TITLE 9
ROWHOUSE AND MULTI-FAMILY RESIDENTIAL DISTRICTS

SUBTITLE 1
PURPOSE OF TITLE

§ 9-101. Purpose.

The purpose of this title is to set out the use regulations and the bulk and yard regulations for Rowhouse and Multi-Family Residential Districts.
(Ord. 16-581.)

SUBTITLE 2
DISTRICT DESCRIPTIONS

§ 9-201. R-5 Transitional Residential District.

(a) *Neighborhoods.*

The R-5 Transitional Residential Zoning District is intended for those areas that facilitate a transition from primarily single-family neighborhoods to neighborhoods that contain a wider mix of housing types.

(b) *Housing types.*

The R-5 District is meant to accommodate single-family units in both detached and semi-detached dwellings, rowhouse developments, and limited low-rise multi-family garden apartment developments of a moderate density.

(Ord. 16-581.)

§ 9-202. R-6 Garden Rowhouse Residential District.

(a) *Neighborhoods*.

The R-6 Garden Rowhouse Residential Zoning District is intended for primarily low density rowhouse neighborhoods that reflect a naturalistic environment typified by open and landscaped front yards of buildings that are set back and that contain stoops and porches oriented to those yards.

(b) *Housing types.*

The R-6 District is meant to accommodate single-family units in both detached and semi-detached dwellings, rowhouse developments, and multi-family developments of a moderate density.

(Ord. 16-581.)

§ 9-203. R-7 Mixed Residential District.

(a) *Neighborhoods.*

The R-7 Mixed Residential Zoning District is intended for those areas that offer a diverse range of housing types. Development in this district accommodates a transition between naturalistic and urban residential settings.

(b) *Housing types.*

The R-7 District is meant to accommodate a diverse range of housing types, including detached and semi-detached dwellings, rowhouse developments, and multi-family developments of a larger scale than found in the more restrictive residential districts.

(Ord. 16-581.)

§ 9-204. R-8 Rowhouse Residential District.

(a) *Neighborhoods.*

The R-8 Rowhouse Residential Zoning District is intended to accommodate and maintain the traditional form of urban rowhouse development typical of many of the City's inner neighborhoods, which contain continuous, block-long rowhouse development built to or only modestly set back from the street.

(b) *Housing types.*

Although rowhouse is the predominant housing type, this district also accommodates other residential types, of a similar density, including detached and semi-detached dwellings, and multi-family developments of a larger scale than found in more restrictive zoning districts.
(Ord. 16-581.)

§ 9-205. R-9 Multi-Family Residential District.

(a) *Neighborhoods.*

The R-9 Multi-Family Residential Zoning District is intended for those areas with significant green space surrounding development, particularly higher density housing and non-residential uses.

(b) *Housing types.*

The R-9 District contains a mix of higher density, but predominantly mid-rise, housing types. Permitted housing types include single-family homes, both detached and semi-detached, rowhouse developments, and multi-family developments, all with significant front yard open space. Characteristic of this district are multi-family developments sited with significant front yard open space and rowhouse developments with open space both along the perimeter of the site and within the development.
(Ord. 16-581.)

§ 9-206. R-10 High-Density Residential District.

The R-10 High-Density Residential Zoning District is intended for areas of significant density accommodated in concentrated high rise and rowhouse development environments.
(Ord. 16-581.)

SUBTITLE 3
USE REGULATIONS

§ 9-301. As listed in Table 9-301.

Only those uses of land listed in *Table 9-301: Rowhouse and Multi-Family Residential Districts – Permitted and Conditional Uses* are allowed within these zoning districts.
(Ord. 16-581.)

SUBTITLE 4
BULK AND YARD REGULATIONS

§ 9-401. In general.

Table 9-401: Rowhouse and Multi-Family Residential Districts – Bulk and Yard Regulations sets forth the applicable bulk and yard regulations for these zoning districts.
(Ord. 16-581.)

§ 9-402. Measurement methodologies; Exceptions, etc.

(a) *Measurement methodologies.*

Measurement methodologies are as set forth in Title 15, Subtitle 3 {"Measurement Methodologies"} of this Code.

(b) *Exceptions and requirements.*

Exceptions and requirements are as set forth in Title 15, Subtitle 4 {"Exceptions and Requirements"} of this Code.
(Ord. 16-581.)

§ 9-403. Setback reduction for courtyard design.

(a) *In general.*

Multi-family dwellings designed with a courtyard are permitted a reduction of the front yard requirement.

(b) *Requirements.*

Front yards may be reduced for courtyard building design as long as:

(1) no more than 75% of the building's frontage maintains a minimum front yard of 15 feet;

(2) the remaining frontage meets the minimum required front yard or 30 feet, whichever is greater; and

(3) those portions of the courtyard building located at a reduced front yard are evenly spaced or within 10% of even spacing.
(Ord. 16-581.)

SUBTITLES 5 AND 6
{RESERVED}

SUBTITLE 7
RESIDENTIAL CONVERSIONS

§ 9-701. Where allowed.

In the Residence Districts, the conversion of a single-family dwelling to a multi-family dwelling is allowed only in the R-7, R-8, R-9, and R-10 Districts, subject to:

(1) the requirements of this subtitle; and

(2) in the R-7 and R-8 Districts, conditional-use approval by Ordinance of the Mayor and City Council.

(Ord. 16-581.)

§ 9-702. Design review.

(a) *In general.*

Design review approval is required if exterior modifications are proposed.

(b) *Construction drawings and plans.*

As part of the submittal for design review, construction drawings and plans that describe the proposed conversion in detail are required.

(Ord. 16-581.)

§ 9-703. Conversion standards.

(a) *In general.*

All conversions must meet the standards set forth in this section.

(b) *Existing dwelling.*

(1) The existing dwelling must be:

(i) a structure originally constructed as a single-family dwelling; and

(ii) 1,500 square feet or more in gross floor area.

(2) For purposes of this subsection, gross floor area does not include any basement area.

(c) *GFA per dwelling unit.*

The converted dwelling must meet the following gross floor area per unit type:

(1) 1-bedroom unit: 750 square feet.

(2) 2-bedroom unit: 1,000 square feet.

(3) 3- or more bedroom unit: 1,250 square feet.

(d) *Bulk and yard regulations.*

The dwelling must continue to conform to the applicable bulk and yard regulations, including lot area per dwelling unit, for the district in which the building is located.

(e) *Occupancy regulations.*

No residential conversion may violate any dwelling unit occupancy regulations or restrictions of the City Code.

(f) *Off-street parking.*

At least 1 off-street parking space must be provided for each dwelling unit.

(g) *Residential character.*

Following the conversion, the exterior of the dwelling must retain its existing residential character.

(Ord. 16-581; Ord. 17-015.)

SUBTITLE 8
OTHER APPLICABLE STANDARDS

§ 9-801. In general.

The Rowhouse and Multi-Family Residential Zoning Districts are also subject to the standards listed in this subtitle.
(Ord. 16-581.)

§ 9-802. Accessory structures and uses.

Standards governing accessory structures and uses are set forth in Title 15, Subtitle 5 {"Accessory Structures and Uses"} of this Code.
(Ord. 16-581.)

§ 9-803. Site development.

On-site development standards are set forth in Title 15 {"Site Development Standards"} of this Code.
(Ord. 16-581; Ord. 17-015.)

§ 9-804. Off-street parking and loading.

Standards governing off-street parking and loading are set forth in Title 16 {"Off-Street Parking and Loading"} of this Code.
(Ord. 16-581.)

§ 9-805. Design standards.

All developments of the type described in § 4-405 {"Design Review: Applicability"} of this Code must comply with the applicable design standards required by the Baltimore City Design Manual.
(Ord. 16-581.)

§ 9-806. Landscaping and screening.

All landscaping and screening must comply with the requirements of the Baltimore City Landscape Manual.
(Ord. 16-581; Ord. 17-015.)

§ 9-807. Signs.

Standards governing signs are set forth in Title 17 {"Signs"} of this Code.
(Ord. 16-581.)

§ 9-808. Temporary uses.

Standards governing temporary uses are set forth in Title 14, Subtitle 4 {"Temporary-Use Standards"} of this Code.
(Ord. 16-581.)

{PAGE LEFT INTENTIONALLY BLANK}

TITLE 10
COMMERCIAL DISTRICTS

SUBTITLE 1
PURPOSE OF TITLE

§ 10-101. Purpose.

The purpose of this title is to set out the use regulations and the bulk and yard regulations for Commercial Zoning Districts.
(Ord. 16-581.)

SUBTITLE 2
DISTRICT DESCRIPTIONS

§ 10-201. C-1 Neighborhood Business District.

(a) *Areas for which intended.*

The C-1 Neighborhood Business Zoning District is intended for areas of commercial clusters or pedestrian-oriented corridors of commercial uses that serve the immediate neighborhood.

(b) *Standards.*

The C-1 District standards are crafted to:

(1) ensure compatibility between neighboring residential and commercial uses;

(2) maintain the proper scale of commercial use; and

(3) address the unique issues related to smaller commercial sites.

(Ord. 16-581.)

§ 10-202. C-1-E Neighborhood Business and Entertainment District.

(a) *Areas for which intended.*

The C-1-E Neighborhood Business and Entertainment Zoning District is intended for areas of commercial clusters or pedestrian-oriented corridors of commercial uses that serve the immediate neighborhood and allow for clustering of entertainment uses.

(b) *Standards.*

The C-1-E District standards are crafted to:

(1) ensure compatibility among neighboring residential, commercial, and entertainment uses;

(2) maintain the proper scale of commercial use; and

(3) address the unique issues related to smaller commercial sites.

(Ord. 16-581.)

§ 10-203. C-1-VC Neighborhood Business District (Village Center).

(a) *Areas for which intended.*

The C-1-VC Neighborhood Business Zoning District (Village Center) is intended for areas of commercial clusters or pedestrian-oriented corridors of commercial uses that serve the immediate neighborhood in a low scale and with a mix of attached and detached structures.

(b) *Standards.*

The C-1-VC District standards are crafted to:

(1) ensure compatibility between neighboring residential and commercial uses;

(2) maintain the proper scale of commercial use; and

(3) address the unique issues related to small commercial sites.

(Ord. 16-581.)

§ 10-204. C-2 Community Commercial District.

(a) *Areas for which intended.*

The C-2 Community Commercial Zoning District is intended for areas of small to medium-scale commercial use, typically located along urban corridors, that are designed to accommodate pedestrians and, in some instances, automobiles.

(b) *Standards.*

The C-2 District standards are crafted to:

(1) ensure compatibility among neighboring residential, commercial, and entertainment uses;

(2) maintain the proper scale of commercial use; and

(3) maintain a balance between high traffic volume and pedestrian circulation.

(Ord. 16-581; Ord. 17-015.)

§ 10-205. C-3 General Commercial District.

(a) *Areas for which intended.*

(1) The C-3 General Commercial Zoning District is intended for more intensive commercial uses and key commercial nodes that require additional controls, particularly for shopping centers and larger retail establishments.

(2) The C-3 District accommodates larger developments that may require significant parking, such as shopping centers and large-scale mixed-use development.

(b) *Standards.*

The C-3 District standards are crafted to:

(1) ensure compatibility among neighboring residential, commercial, and entertainment uses;

(2) ensure high quality pedestrian connections between public sidewalks and business entrances; and

(3) create store fronts that are oriented towards streets and other public ways.

(Ord. 16-581.)

§ 10-206. C-4 Heavy Commercial District.

(a) *Areas for which intended.*

The C-4 Heavy Commercial Zoning District is intended for areas of more intense commercial use that are generally not appropriate for lower intensity commercial districts, including uses related to motor vehicles and those that might require outdoor storage.

(b) *Standards.*

Because of the impacts from more intensive commercial uses, the standards for this district ensure that setbacks, buffering, and site development controls are in place to mitigate negative impacts on neighboring uses.

(Ord. 16-581.)

§ 10-207. C-5 Downtown District.

(a) *Areas for which intended.*

The C-5 Downtown Zoning District is intended for Baltimore's Downtown and accommodates a wide range of uses normally associated with the downtown of a major city.

(b) *Standards.*

The C-5 District standards are crafted to:

(1) maintain or improve the pedestrian environment;

(2) ensure that new construction is compatible with existing development; and

(3) develop a greener downtown.

(c) *Subdistricts.*

(1) *In general.*

In order to address the different character areas that make up Downtown, the C-5 District is divided into the following subdistricts, for which varied bulk and yard regulations are provided to recognize the different physical characteristics of Downtown.

(2) *C-5-DC Downtown Core Subdistrict.*

(i) The purpose of the C-5-DC Downtown Core Subdistrict is to establish these standards for structures located within the majority of Downtown.

(ii) The standards recognize that this subdistrict is to be the most intensely developed portion of Downtown and is to be predominately pedestrian-oriented in nature.

(3) *C-5-IH Inner Harbor Subdistrict.*

(i) The purpose of the C-5-IH Inner Harbor Subdistrict is to establish these standards for structures located adjacent to and facing the Inner Harbor.

(ii) The standards recognize that development within this subdistrict is to be oriented to the Inner Harbor waterfront and be predominantly pedestrian-oriented. Development is relatively low-scaled to accommodate the view of the harbor from adjoining subdistricts.

(4) *C-5-DE Downtown East Subdistrict.*

(i) The purpose of the C-5-DE Downtown East Subdistrict is to establish these standards for structures within a high intensity waterfront-oriented area.

(ii) The standards recognize that this area is to contain intense levels of development to create a high density, walkable, mixed-use environment where careful placement of structures affords visual access to the waterfront as well as pedestrian access within.

(iii) Because this subdistrict is adjacent to lower density neighborhoods of historic and traditional character, the intensity and height of development on the periphery of the subdistrict are intended to provide a transition between the core of this subdistrict and the adjacent neighborhoods.

(5) *C-5-HT Downtown Historic and Traditional Subdistrict.*

(i) The purpose of the C-5-HT Downtown Historic and Traditional Subdistrict is to establish these standards for structures in an area of Downtown containing substantial historic and traditional architecture that has evolved since the founding of the City.

(ii) Given the character of that development, this district is designed to require relatively low heights and the use of materials that reflect the existing development context.

(6) *C-5-TO Downtown Traditional Office Subdistrict.*

The purpose of the C-5-TO Downtown Traditional Office Subdistrict is:

(i) to establish these standards for structures in an area that primarily consists of early 20th Century office development; and

(ii) to seek to maintain a distinctive and desirable environment.

(7) *C-5-HS Howard Street Mixed-Use Subdistrict.*

The purpose of the C-5-HS Howard Street Mixed-Use Subdistrict is to establish these standards for structures to facilitate a transition between the intensive development of

the Downtown core and the more modest-scale development found in adjacent, primarily residential environments.

(8) *C-5-G Government Center Subdistrict.*

(i) The purpose of the C-5-G Government Center Subdistrict is to establish these standards for structures that reflect the scale of major governmental buildings located within the district.

(ii) The intent is to ensure that future development reflects the existing scale of development and maintains critical views of these public buildings from the adjacent areas.

(Ord. 16-581; Ord. 17-015.)

SUBTITLE 3
USE REGULATIONS

§ 10-301. As listed in Table 10-301.

Only those uses of land listed in *Table 10-301: Commercial Districts – Permitted and Conditional Uses* are allowed within these zoning districts.
(Ord. 16-581.)

SUBTITLE 4
BULK AND YARD REGULATIONS

§ 10-401. In general.

Table 10-401: Commercial Districts – Bulk and Yard Regulations sets forth the applicable bulk and yard regulations for these zoning districts.
(Ord. 16-581.)

§ 10-402. Measurement methodologies; Exceptions, etc.

(a) *Measurement methodologies.*

Measurement methodologies are as set forth in Title 15, Subtitle 3 {"Measurement Methodologies"} of this Code.

(b) *Exceptions and requirements.*

Exceptions and requirements are as set forth in Title 15, Subtitle 4 {"Exceptions and Requirements"} of this Code.
(Ord. 16-581.)

SUBTITLE 5
DESIGN STANDARDS FOR C-5 DISTRICT

§ 10-501. Harbor promenade.

Within certain areas of the C-5-DC, C-5-IH, and C-5-DE Subdistricts, a harbor promenade is required. (The applicable areas are shown on the zoning map for the Waterfront Overlay Zoning Districts.) New development in these areas must comply with Title 12, Subtitle 9 {"Waterfront Overlay Zoning Districts"} of this Code.
(Ord. 16-581.)

§ 10-502. Open-space plazas.

(a) *Permitted in C-5 District.*

Public open-space plazas are permitted within the C-5 District.

(b) *Design requirements.*

Open-space plazas must comply with the following design requirements:

(1) a plaza must be designed to be accessible from adjoining buildings and for generally unobstructed pedestrian circulation throughout the plaza; and

(2) visibility into the plaza may not be entirely blocked by structures.
(Ord. 16-581; Ord. 17-015.)

§ 10-503. Parking and access.

(a) *District exempt from parking requirements.*

The C-5 District is exempt from the parking requirements of this Code.

(b) *New curb cuts.*

New curb cuts are prohibited on primary streets.

(c) *Along Pratt Street.*

Along Pratt Street:

(1) parking garages as principal uses are prohibited;

(2) vehicle entries to parking garages are prohibited; and

(3) all parking garages must be faced with active ground-floor uses, whether residential or non-residential.
(Ord. 16-581.)

§ 10-504. View protection.

(a) *Skyways, street bridges prohibited.*

Except as provided in subsection (b) of this section, skyways and street bridges are prohibited in the C-5 District.

(b) *Exception for hospital uses*

For hospital uses, a skyway or street bridge is allowed, subject to conditional use approval from the Board of Municipal and Zoning Appeals.

(Ord. 16-581.)

SUBTITLE 6
OTHER APPLICABLE STANDARDS

§ 10-601. In general.

The Commercial Zoning Districts are also subject to the standards listed in this subtitle.
(Ord. 16-581.)

§ 10-602. Accessory structures and uses.

Standards governing accessory structures and uses are set forth in Title 15, Subtitle 5 {"Accessory Structures and Uses"} of this Code.
(Ord. 16-581.)

§ 10-603. Site development.

On-site development standards are set forth in Title 15 {"Site Development Standards"} of this Code.
(Ord. 16-581; Ord. 17-015.)

§ 10-604. Off-street parking and loading.

Standards governing off-street parking and loading are set forth in Title 16 {"Off-Street Parking and Loading"} of this Code.
(Ord. 16-581.)

§ 10-605. Design standards.

All developments of the type described in § 4-405 {"Design Review: Applicability"} of this Code must comply with the applicable design standards required by the Baltimore City Design Manual.
(Ord. 16-581.)

§ 10-606. Landscaping and screening.

All landscaping and screening must comply with the requirements of the Baltimore City Landscape Manual.
(Ord. 16-581; Ord. 17-015.)

§ 10-607. Signs.

Standards governing signs are set forth in Title 17 {"Signs"} of this Code.
(Ord. 16-581.)

§ 10-608. Temporary uses.

Standards governing temporary uses are set forth in Title 14, Subtitle 4 {"Temporary-Use Standards"} of this Code.
(Ord. 16-581.)

§ 10-609. Residential conversions.

The conversion of a single-family dwelling to a multi-family dwelling is allowed in the Commercial Zoning Districts, subject to the requirements of § 9-702 {"Residential Conversions: Design review"} and § 9-703 {"Residential Conversions: Conversion standards"} of this Code.

(Ord. 16-581.)

TITLE 11
INDUSTRIAL DISTRICTS

SUBTITLE 1
PURPOSE OF TITLE

§ 11-101. Purpose.

The purpose of this title is to set out the use regulations and the bulk and yard regulations for Industrial Zoning Districts.
(Ord. 16-581.)

SUBTITLE 2
DISTRICT DESCRIPTIONS

§ 11-201. OIC Office-Industrial Campus District.

(a) *In general.*

(1) *Intent.*

The OIC Office-Industrial Campus Zoning District is intended for developments of large office structures, research and development facilities, and light industrial uses.

(2) *Minimum size of district.*

An OIC District must encompass at least 1 acre of land.

(b) *Standards.*

The OIC District standards are intended for architecturally coordinated office and industrial structures built in a campus-like atmosphere.

(c) *Typical uses.*

Examples of typical OIC District uses include:

(1) the international headquarters of a large corporation;

(2) large research and development facilities; and

(3) office campuses of substantial size.

(Ord. 16-581; Ord. 17-015.)

§ 11-202. BSC Bio-Science Campus District.

(a) *In general.*

(1) *Intent.*

The BSC Bio-Science Campus Zoning District is intended to accommodate bio-science campuses, including supportive uses, and some residential uses.

(2) *Minimum size of district.*

A BSC District must encompass at least 1 acre of land.

(b) *Uses.*

The BSC District allows:

(1) a broad mix of uses, integrating manufacturing, office, and research and development; and

(2) additional supportive uses, like limited retail, educational facilities, and some higher density residential uses.

(Ord. 16-581; Ord. 17-015.)

§ 11-203. I-MU Industrial Mixed-Use District.

(a) *Intent.*

The I-MU Industrial Mixed-Use Zoning District is intended to encourage the reuse of older industrial buildings for light industrial use, as well as a variety of non-industrial uses. These older industrial buildings are often surrounded by residential and other non-industrial uses.

(b) *Surrounding, non-industrial uses.*

Examples of non-industrial uses, creating a mixed-use or multi-tenant environment, include:

(1) live-work dwellings;

(2) residential uses;

(3) commercial uses; and

(4) limited institutional uses.

(c) *Floor area requirement for certain uses.*

In the I-MU district:

(1) an industrial use must account for a floor area (located anywhere in any building on the same lot) equal to at least 50% of the total ground floor area of all buildings on the lot; or

(2) a use other than residential and other than parking must account for a floor area (located anywhere in any building on the same lot) equal to at least 60% of the total ground-floor area of all buildings on the lot.

(d) *Floor area exception.*

Subsection (c) of this section does not apply to lots located within 300 feet of a residential zoning district.

(Ord. 16-581.)

§ 11-204. I-1 Light Industrial District.

(a) *Intent.*

The I-1 Light Industrial Zoning District is intended to provide for a wide variety of light manufacturing, fabricating, processing, wholesale distributing, and warehousing uses.

(b) *Light industrial uses.*

Light industrial uses are enclosed low-intensity, non-nuisance light fabrication and assembly-type manufacturing, with little to no outside impacts.

(Ord. 16-581.)

§ 11-205. I-2 General Industrial District.

(a) *Intent.*

The I-2 General Industrial Zoning District is intended to provide for a wide variety of general manufacturing, fabricating, processing, wholesale distributing, and warehousing uses.

(b) *Uses.*

(1) General industrial uses include fabrication, warehousing and assembly-type manufacturing, which may result in some moderate external effects, such as smoke, noise, glare, or vibration, and typically include outdoor storage and related outdoor activities.

(2) Commercial uses and outdoor storage of materials are allowed.

(Ord. 16-581.)

§ 11-206. MI Maritime Industrial District.

(a) *Intent.*

The MI Maritime Industrial Zoning District is intended to ensure the preservation of deep-water frontage of the Port of Baltimore for maritime industrial uses by delineating an area where maritime shipping and maritime industrial uses can be conducted without the intrusion of non-industrial uses and where investment in maritime infrastructure is encouraged.

(b) *Nature of uses.*

The nature of these activities may result in external effects, such as smoke, noise, glare, or vibration, and typically include outdoor storage and related outdoor activities.

(Ord. 16-581.)

SUBTITLE 3
USE REGULATIONS

§ 11-301. As listed in Table 11-301.

Only those uses of land listed in *Table 11-301: Industrial Districts – Permitted and Conditional Uses* are allowed within these zoning districts.
(Ord. 16-581; Ord. 17-015.)

SUBTITLE 4
BULK AND YARD REGULATIONS

§ 11-401. In general.

Table 11-401: Industrial Districts – Bulk and Yard Regulations sets forth the applicable bulk and yard regulations for these zoning districts.
(Ord. 16-581.)

§ 11-402. Measurement methodologies; Exceptions, etc.

(a) *Measurement methodologies.*

Measurement methodologies are as set forth in Title 15, Subtitle 3 {"Measurement Methodologies"} of this Code.

(b) *Exceptions and requirements.*

Exceptions and requirements are as set forth in Title 15, Subtitle 4 {"Exceptions and Requirements"} of this Code.
(Ord. 16-581.)

SUBTITLE 5
{RESERVED}

SUBTITLE 6
OTHER APPLICABLE STANDARDS

§ 11-601. In general.

The Industrial Zoning Districts are also subject to the standards listed in this subtitle.
(Ord. 16-581.)

§ 11-602. Accessory structures and uses.

Standards governing accessory structures and uses are set forth in Title 15, Subtitle 5 {"Accessory Structures and Uses"} of this Code.
(Ord. 16-581.)

§ 11-603. Site development.

On-site development standards are set forth in Title 15 {"Site Development Standards"} of this Code.
(Ord. 16-581; Ord. 17-015.)

§ 11-604. Off-street parking and loading.

Standards governing off-street parking and loading are set forth in Title 16 {"Off-Street Parking and Loading"} of this Code.
(Ord. 16-581.)

§ 11-605. Design standards.

All developments of the type described in § 4-405 {"Design Review: Applicability"} of this Code must comply with the applicable design standards required by the Baltimore City Design Manual.
(Ord. 16-581.)

§ 11-606. Landscaping and screening.

All landscaping and screening must comply with the requirements of the Baltimore City Landscape Manual.
(Ord. 16-581; Ord. 17-015.)

§ 11-607. Signs.

Standards governing signs are set forth in Title 17 {"Signs"} of this Code.
(Ord. 16-581.)

§ 11-608. Temporary uses.

Standards governing temporary uses are set forth in Title 14, Subtitle 4 {"Temporary-Use Standards"} of this Code.
(Ord. 16-581.)

TITLE 12
SPECIAL PURPOSE DISTRICTS

SUBTITLE 1
PURPOSE OF TITLE

§ 12-101. In general.

The purpose of this title is to set out the use regulations, bulk and yard regulations, and other standards for:

(1) Office-Residential Zoning Districts;

(2) Transit-Oriented Development Zoning Districts;

(3) Educational Campus Zoning Districts;

(4) Hospital Campus Zoning Districts;

(5) Transportation Zoning Districts;

(6) *{Reserved}*

(7) Waterfront Overlay Zoning Districts;

(8) Rowhouse Mixed-Use Overlay Zoning Districts;

(9) Detached Dwelling Mixed-Use Overlay Zoning Districts;

(10) Adult-Use Overlay Zoning Districts; and

(11) Port Covington Zoning District.

(Ord. 16-581; Ord. 17-015.)

§ 12-102. Purpose of overlay districts.

An overlay district is a district, established by ordinance, by which a layer of regulations is superimposed on the regulations of an underlying zoning district. The overlay district is intended to modify or supplement the regulations of its underlying zoning districts in recognition of unique circumstances in the area, while maintaining the general character and purpose of the underlying zoning districts over which it is located.

(Ord. 17-015.)

SUBTITLE 2
DISTRICT DESCRIPTIONS

§ 12-201. OR Office-Residential Districts.

OR Office-Residential Zoning Districts are intended for areas where there is a mix of office and residential uses. The regulations for these Districts are designed to ensure that office uses remain compatible with residential uses, thereby permitting the area to maintain a more residential character.

(Ord. 16-581; Ord. 17-015.)

§ 12-202. TOD Transit-Oriented Development Districts.

The purpose of TOD Transit-Oriented Development Zoning Districts is to encourage the location of uses and forms of development conducive to increased transit usage. These Districts are intended to promote new, well-integrated residential and commercial development around transit stations, to ensure that new development occurs in the form of compatible, higher density, transit-friendly design in close proximity to transit systems, to encourage a pedestrian-orientation in new development, to decrease reliance on motor vehicles by increasing transit uses, and to encourage a mix of buildings and activities that provides settings for social interaction and active community life. In order to address the different characteristics of transit locations within the City, 4 TOD Districts are established: the TOD-1 District, TOD-2 District, TOD-3 District and the TOD-4 District. The primary distinctions among these 4 TOD Districts are height, residential density, and use mix.

(Ord. 16-581; Ord. 17-015..)

§ 12-203. EC Educational Campus Districts.

EC Educational Campus Zoning Districts are intended for the campuses of educational facilities to facilitate an orderly and efficient regulation process for these types of users. There are 2 Educational Campus Zoning Districts: a campus district for colleges and universities that allows for certain non-educational uses and dormitories for students and a second campus for primary and secondary educational facilities that is restricted to education-related uses. These Districts provide a set of base district regulations that offers a certain intensity of development by right. They also provide an allowance for a Campus Master Plan, which must be approved by ordinance, that allows for flexibility in the development and expansion of the campus above the base district regulations.

(Ord. 16-581; Ord. 17-015..)

§ 12-204. H Hospital Campus Districts.

H Hospital Campus Zoning Districts are intended to address the special needs and impacts of large-scale, multi-functional hospitals and medical campuses, including hospital-related and support service uses, such as offices and commercial uses. These Districts provide a set of base district regulations that offers a certain intensity of development by right. They also provide an allowance for a General Development Plan, which must be approved by ordinance, that allows for flexibility in the development and expansion of the hospital campus above the base district regulations.

(Ord. 16-581; Ord. 17-015..)

§ 12-205. T Transportation Districts.

T Transportation Zoning Districts are intended to preserve, protect and enhance road, rail and other transportation corridors within the City.
(Ord. 16-581; Ord. 17-015..)

§ 12-206. *{Reserved}*

§ 12-207. W Waterfront Overlay Districts.

W Waterfront Overlay Zoning Districts are intended to preserve, create, and enhance public views of and access to the waterfront and creatively encourage use of the waterfront by providing a waterfront promenade, including connections to nearby public rights-of-way, open spaces, and other public amenities. These Districts serve to establish a process to encourage new waterfront development to occur in a manner that seeks to minimize substantial change to existing public views of the waterfront from adjacent public streets and neighborhoods, and to enhance the existing waterfront promenade by creating a continuous public access via a promenade along non-industrial portions of the City's waterfront.
(Ord. 16-581; Ord. 17-015..)

§ 12-208. R-MU Rowhouse Mixed-Use Overlay Districts.

R-MU Rowhouse Mixed-Use Overlay Zoning Districts are intended to address those areas of rowhouse development where a mixed-use environment is desired, where some rowhouse structures are used for residential uses and others for first-floor commercial uses. These Overlay Districts are tied directly to the underlying rowhouse district in order to maintain the existing character of the development and the neighborhood. Commercial uses are restricted to only those uses that are compatible with residential uses.
(Ord. 16-581; Ord. 17-015..)

§ 12-209. D-MU Detached Dwelling Mixed-Use Overlay Districts.

D-MU Detached Dwelling Mixed-Use Overlay Zoning Districts address those areas of detached dwelling development where a mixed-use environment is desired, where some detached dwellings are used for residential uses and others for first-floor non-residential uses. These Overlay Districts are tied directly to the underlying detached residential district in order to maintain the existing character of the development and the neighborhood. Non-residential uses are restricted to only those uses that are compatible with residential uses.
(Ord. 16-581; Ord. 17-015..)

§ 12-210. AU Adult Use Overlay Districts.

AU Adult Use Overlay Zoning Districts are intended to provide areas in which to operate an adult use.
(Ord. 16-581; Ord. 17-015..)

§ 12-211. PC Port Covington Zoning District.

The Port Covington Zoning District is intended to establish the standards to accommodate the transition of the Port Covington area, located along the north shore of the Middle Branch of the Patapsco River, from a heavy industrial area to a high intensity, mixed-use, waterfront-oriented area over time. The standards recognize that this area is unique because of both its waterfront access and separation from established neighborhoods to the north by the elevated portion of I-95 and a heavy rail line. The Port Covington Zoning District is designed to accommodate an office-industrial headquarters campus and adjacent high-intensity mixed-use with recreational and entertainment amenities to promote a live-work-play community within an ecologically sustainable environment.
(Ord. 16-581; Ord. 17-015..)

SUBTITLE 3
OFFICE-RESIDENTIAL DISTRICTS

§ 12-301. Use regulations.

Only those uses of land listed in *Table 12-301: Office-Residential Districts – Permitted and Conditional Uses* are allowed within an OR Zoning District.
(Ord. 16-581; Ord. 17-015..)

§ 12-302. Bulk and yard regulations.

(a) *In general.*

Table 12-302: Office-Residential Districts – Bulk and Yard Regulations sets forth the applicable bulk and yard regulations for an OR District.

(b) *Measurement methodologies.*

Measurement methodologies are as set forth in Title 15, Subtitle 3 {"Measurement Methodologies"} of this Code.

(c) *Exceptions and requirements.*

Exceptions and requirements are as set forth in Title 15, Subtitle 4 {"Exceptions and Requirements"} of this Code.
(Ord. 16-581; Ord. 17-015..)

§ 12-303. Other applicable standards.

(a) *In general.*

OR Zoning Districts are also subject to the standards listed in this section.

(b) *Accessory structures and uses.*

Standards governing accessory structures and uses are set forth in Title 15, Subtitle 5 {"Accessory Structures and Uses"} of this Code.

(c) *Site development.*

On-site development standards are set forth in Title 15 {"Site Development Standards"} of this Code.

(d) *Off-street parking and loading.*

Standards governing off-street parking and loading are set forth in Title 16 {"Off-Street Parking and Loading"} of this Code.

(e) *Design standards*.

All developments of the type described in § 4-405 {"Design Review: Applicability"} of this Code must comply with the applicable design standards required by the Baltimore City Design Manual.

(f) *Landscaping and screening.*

All landscaping and screening must comply with the requirements of the Baltimore City Landscape Manual.

(g) *Signs.*

Standards governing signs are set forth in Title 17 {"Signs"} of this Code.

(h) *Temporary uses.*

Standards governing temporary uses are set forth in Title 14, Subtitle 4 {"Temporary-Use Standards"} of this Code.

(i) *Residential conversions.*

The conversion of a single-family dwelling to a multi-family dwelling is allowed in an OR Zoning District, subject to the requirements of § 9-702 {"Residential Conversions: Design review"} and § 9-703 {"Residential Conversions: Conversion standards"} of this Code.

(Ord. 16-581; Ord. 17-015..)

SUBTITLE 4
TRANSIT-ORIENTED DEVELOPMENT DISTRICTS

§ 12-401. Establishment of TOD Districts.

4 types of Transit-Oriented Development Districts are established for areas around existing and anticipated transit stations, as follows:

(1) The TOD-1 Transit-Oriented Development District is characterized by a more restrictive height and a limited retail use mix;

(2) the TOD-2 Transit-Oriented Development District is characterized by a more restrictive height and a full mix of uses;

(3) the TOD-3 Transit-Oriented Development District is characterized by significant height and a limited retail use mix; and

(4) the TOD-4 Transit-Oriented Development District is characterized by significant height and a full mix of uses.

(Ord. 16-581.)

§ 12-402. Use regulations.

Only those uses of land listed in *Table 12-402: Transit-Oriented Development Districts – Permitted and Conditional Uses* are allowed within a TOD Zoning District.

(Ord. 16-581; Ord. 17-015..)

§ 12-403. Bulk and yard regulations.

(a) *In general.*

Table 12-403: Transit-Oriented Development Districts – Bulk and Yard Regulations sets forth the applicable bulk and yard regulations for a TOD District.

(b) *Measurement methodologies.*

Measurement methodologies are as set forth in Title 15, Subtitle 3 {"Measurement Methodologies"} of this Code.

(c) *Exceptions and requirements.*

Exceptions and requirements are as set forth in Title 15, Subtitle 4 {"Exceptions and Requirements"} of this Code.

(Ord. 16-581; Ord. 17-015..)

§ 12-404. *{Reserved}*

§ 12-405. Parking requirements.

(a) *In general.*

(1) The parking regulations of this section apply to the TOD Districts, in addition to the parking regulations of Title 16 {"Off-Street Parking and Loading"} of this Code.

(2) For all commercial and mixed-use structures, off-street parking is prohibited in front of the corner-side or front building line.

(b) *Residential uses.*

(1) For a multi-family dwelling, no more than 1 off-street parking space per dwelling unit, plus 1 guest space per 15 dwelling units is permitted.

(2) For a rowhouse or multi-family dwelling, no minimum parking is required.

(c) *Non-residential uses.*

(1) Non-residential uses of less than 2,000 square feet are exempt from all parking requirements.

(2) Parking for non-residential uses may be provided at no more than 3 spaces per 1,000 square feet of gross floor area.

(d) *Lots.*

Parking lots may not exceed 1 acre in size.

(e) *Ingress and egress.*

Where feasible, ingress to and egress from parking must be from side streets or alleys.
(Ord. 16-581; Ord. 17-015..)

§ 12-406. Other applicable standards.

(a) *In general.*

The TOD Zoning Districts are also subject to the standards listed in this section.

(b) *Accessory structures and uses.*

Standards governing accessory structures and uses are set forth in Title 15, Subtitle 5 {"Accessory Structures and Uses"} of this Code.

(c) *Site development.*

On-site development standards are set forth in Title 15 {"Site Development Standards"} of this Code.

(d) *Off-street parking and loading.*

Standards governing off-street parking and loading are set forth in Title 16 {"Off-Street Parking and Loading"} of this Code.

(e) *Design standards*.

All developments of the type described in § 4-405 {"Design Review: Applicability"} of this Code must comply with the applicable design standards required by the Baltimore City Design Manual.

(f) *Landscaping and screening.*

All landscaping and screening must comply with the requirements of the Baltimore City Landscape Manual.

(g) *Signs.*

Standards governing signs are set forth in Title 17 {"Signs"} of this Code.

(h) *Temporary uses.*

Standards governing temporary uses are set forth in Title 14, Subtitle 4 {"Temporary-Use Standards"} of this Code.

(Ord. 16-581; Ord. 17-015..)

SUBTITLE 5
EDUCATIONAL CAMPUS DISTRICTS

§ 12-501. Use Regulations.

Only those uses of land listed in *Table 12-501: Educational Campus Districts – Permitted and Conditional Uses* are allowed within an Educational Campus Zoning District.
(Ord. 16-581; Ord. 17-015.)

§ 12-502. Bulk and Yard Regulations.

(a) *In general.*

(1) Except as provided in § 12-503 {"Educational Campus Master Plan"} of this subtitle, *Table 12-502: Educational Campus Districts – Bulk and Yard Regulations* sets forth the applicable bulk and yard regulations for new construction in the EC-1 and EC-2 Districts.

(2) Educational buildings existing as of June 5, 2017, regardless of height and yards, are deemed conforming.

(b) *Measurement methodologies.*

Measurement methodologies are as set forth in Title 15, Subtitle 3 {"Measurement Methodologies"} of this Code.

(c) *Exceptions and requirements.*

In this District, height limits are relative to the perimeter street building. Therefore, height is measured from the closest perimeter street to the building.
(Ord. 16-581; Ord. 17-015.)

§ 12-503. Educational Campus Master Plan.

(a) *In general.*

(1) An educational facility within the EC District must obtain approval by ordinance of a Campus Master Plan for any new construction that would deviate from the bulk and yard regulations of *Table 12-502*.

(2) Once a Campus Master Plan is submitted and approved, the development proceeds in accordance with the plan rather than the base district regulations.

(3) Until a Campus Master Plan has been approved, *Table 12-502* applies in its entirety to the EC District.

(b) *Applicability; Effect.*

A Campus Master Plan may be applied only to those properties owned by an educational facility.

(c) *Procedure.*

A Campus Master Plan (and any subsequent amendment to it) requires approval by ordinance, in accordance with the applicable procedures of Title 5, Subtitle 5 {"Legislative Authorizations"} of this Code.

(d) *Submittal requirements*.

The Campus Master Plan must:

(1) address the general site layout of the entire district; and

(2) include the following:

(i) a site plan for development of the entire district, including the proposed boundaries of the District;

(ii) the location, square footage, and building heights of all existing structures and uses;

(iii) the location, approximate square footage, and approximate building heights, within a reasonable range, of all proposed structures and uses;

(iv) a landscape plan that shows the location of all open space and of any buffering or screening along the perimeter of the district;

(v) a sign plan that shows the location of site-access identification and directional signs;

(vi) internal traffic circulation plans, including traffic ingress and egress locations, pedestrian circulation, bicycle circulation, and public transit access; and

(vii) the location and capacity of all off-street parking and loading spaces.

(e) *EC District zoning map amendments***.**

(1) A condition of the EC-1 or EC-2 District zoning designation is that the primary use within the proposed area is an educational facility.

(2) An educational facility may choose to submit a Campus Master Plan for approval simultaneously with a zoning map amendment, both subject to approval by ordinance, so that the land would controlled by the Campus Master Plan, rather than the base district standards.

(3) Map amendments to increase the boundaries of, add additional uses to, or add additional property to the EC District requires Campus Master Plan approval by ordinance.

(Ord. 16-581; Ord. 17-015.)

§ 12-504. Other applicable standards.

(a) *In general.*

Unless a Campus Master Plan has been approved, the standards listed in this section apply to the EC Districts.

(b) *Accessory structures and uses.*

Standards governing accessory structures and uses are set forth in Title 15, Subtitle 5 {"Accessory Structures and Uses"} of this Code.

(c) *Site development.*

On-site development standards are set forth in Title 15 {"Site Development Standards"} of this Code.

(d) *Off-street parking and loading.*

Standards governing off-street parking and loading are set forth in Title 16 {"Off-Street Parking and Loading"} of this Code.

(e) *Design standards*.

All developments of the type described in § 4-405 {"Design Review: Applicability"} of this Code must comply with the applicable design standards required by the Baltimore City Design Manual.

(f) *Landscaping and screening.*

All landscaping and screening must comply with the requirements of the Baltimore City Landscape Manual.

(g) *Signs.*

Standards governing signs are set forth in Title 17 {"Signs"} of this Code.

(h) *Temporary uses.*

Standards governing temporary uses are set forth in Title 14, Subtitle 4 {"Temporary-Use Standards"} of this Code.

(Ord. 16-581; Ord. 17-015.)

§ 12-505. Minimum size of district.

An Educational Campus District must encompass at least the smaller of the following:

(1) 2 acres of land; or

(2) the entire city block on which it is situated.

(Ord. 17-015.)

{PAGE LEFT INTENTIONALLY BLANK}

SUBTITLE 6
HOSPITAL CAMPUS DISTRICTS

§ 12-601. Use regulations.

Only those uses of land listed in *Table 12-601: Hospital Campus Districts – Permitted and Conditional Uses* are allowed within a Hospital Campus Zoning District.
(Ord. 16-581; Ord. 17-015.)

§ 12-602. Bulk and yard regulations.

(a) *In general.*

(1) Except as provided in § 12-603 {"Hospital General Development Plan"} of this subtitle, *Table 12-602: Hospital Campus Districts – Bulk and Yard Regulations* sets forth the applicable bulk and yard regulations for new construction in the H District.

(2) Hospital buildings existing as of June 5, 2017, regardless of height and yards, are deemed conforming.

(b) *Measurement methodologies.*

Measurement methodologies are as set forth in Title 15, Subtitle 3 {"Measurement Methodologies"} of this Code.

(c) *Exceptions and requirements.*

In this District, height limits are relative to the perimeter street building. Therefore, height is measured from the closest perimeter street to the building.
(Ord. 16-581; Ord. 17-015.)

§ 12-603. Hospital General Development Plan.

(a) *In general.*

(1) A hospital facility within the H District must obtain approval by ordinance of a General Development Plan for any new construction that would deviate from the bulk and yard regulations of *Table 12-602.*

(2) Once a General Development Plan is submitted and approved, the development proceeds in accordance with the plan rather than the base district regulations.

(b) *Applicability; Effect.*

(1) A General Development Plan may be applied only to those properties owned by a hospital facility at the time of the plan's approval.

(2) An approved General Development Plan is a permitted exception to all base district regulations expressly made subject to the plan, including plan-approved use, sign, parking, and maximum height regulations.

(c) *Procedure.*

A General Development Plan (and any subsequent amendment to it) requires approval by ordinance, in accordance with the applicable procedures of Title 5, Subtitle 5 {"Legislative Authorizations"} of this Code.

(d) *Submittal requirements.*

The General Development Plan must:

(1) address the general site layout of the entire district; and

(2) include the following:

(i) a site plan for development of the entire district, including the proposed boundaries of the District;

(ii) the location, square footage, and building heights of all existing structures and uses;

(iii) the location, approximate square footage, and approximate building heights, within a reasonable range, of all proposed structures and uses;

(iv) a landscape plan that shows the location of all open space and of any buffering or screening along the perimeter of the district;

(v) a sign plan that shows the location of on-site identification and directional signs;

(vi) internal traffic circulation plans, including traffic ingress and egress locations, pedestrian circulation, bicycle circulation, and public transit access; and

(vii) the location and capacity of existing and proposed off-street parking and loading spaces.

(e) *H District zoning map amendments*.

(1) A condition of the H District zoning designation is that the primary use within the proposed area is a hospital.

(2) A hospital may choose to submit a General Development Plan for approval simultaneously with a zoning map amendment, both subject to approval by ordinance, so that the land would be controlled by the General Development Plan, rather than the base district standards.

(3) Map amendments to increase the boundaries of, add additional uses to, or add additional property to the H District requires General Development Plan approval by ordinance.

(Ord. 16-581; Ord. 17-015.)

§ 12-604. Other applicable standards.

(a) *In general.*

Unless a General Development Plan has been approved, the standards listed in this section apply to the H District.

(b) *Accessory structures and uses.*

Standards governing accessory structures and uses are set forth in Title 15, Subtitle 5 {"Accessory Structures and Uses"} of this Code.

(c) *Site development.*

On-site development standards are set forth in Title 15 {"Site Development Standards"} of this Code.

(d) *Off-street parking and loading.*

Standards governing off-street parking and loading are set forth in Title 16 {"Off-Street Parking and Loading"} of this Code.

(e) *Design standards*.

All developments of the type described in § 4-405 {"Design Review: Applicability"} of this Code must comply with the applicable design standards required by the Baltimore City Design Manual.

(f) *Landscaping and screening.*

All landscaping and screening must comply with the requirements of the Baltimore City Landscape Manual.

(g) *Signs.*

Standards governing signs are set forth in Title 17 {"Signs"} of this Code.

(h) *Temporary uses.*

Standards governing temporary uses are set forth in Title 14, Subtitle 4 {"Temporary-Use Standards"} of this Code.

(Ord. 16-581; Ord. 17-015.)

§ 12-605. Minimum size of district.

A Hospital Campus District must encompass at least 1 the smaller of the following:

(1) 2 acres of land; or

(2) the entire city block on which it is situated.

(Ord. 17-015.)

SUBTITLE 7
TRANSPORTATION DISTRICTS

§ 12-701. Use regulations.

In a Transportation District, the following uses are permitted:

(1) Public rights-of-way.

(2) Commuter and freight rail lines and activities directly related to the provision of commuter or freight rail service, including accessory structures.

(3) Bus ways.

(4) Pedestrian and bicycle trails.

(Ord. 16-581; Ord. 17-015.)

SUBTITLE 8
{RESERVED}

SUBTITLE 9
WATERFRONT OVERLAY DISTRICTS

§ 12-901. Applicability.

(a) *In general.*

The Waterfront Overlay Districts apply to all waterfront lots as shown on the zoning map. Unless modified by this section, the underlying zoning district and critical area regulations apply (*See* Title 7, Subtitle 4).

(b) *Subdistricts.*

(1) 2 subdistricts of a Waterfront Overlay Zoning District apply as provided in this subsection.

(2) The W-1 Subdistrict applies to land along the waterfront areas characterized by a hardscape boundary with the water, such as bulkheads, port facilities, or a hard-surface promenade.

(2) The W-2 Subdistrict applies to areas with a soft shoreline, such as wetlands, vegetation, or habitat areas that directly abut the water, most notably along the Middle Branch. To ensure a compatible development pattern along the shoreline, property owners are encouraged to cooperate as development proceeds in a W-2 Subdistrict.

(c) *Industrial properties excluded.*

The Waterfront Overlay Districts do not apply to industrially zoned properties.
(Ord. 16-581; Ord. 17-015.)

§ 12-902. Design review required.

Before any new construction may begin in the Waterfront Overlay Zoning Districts, design review approval is required.
(Ord. 16-581.)

§ 12-903. Maximum building heights.

Maximum building heights in the Waterfront Overlay Zoning Districts are as indicated in the following Tables, not by the underlying zoning:

(1) *Table 12-903(1): Canton Waterfront Area*;

(2) *Table 12-903(2): Fells Point Waterfront Area*;

(3) *Table 12-903(3): Key Highway Waterfront Area*; and

(4) *Table 12-903(4): Middle Branch Waterfront Area.*
(Ord. 16-581.)

§ 12-904. Protection of public right-of-way view corridors.

(a) *W-1 Overlay Subdistrict*.

(1) No development may block the view of the waterfront from any public street that extends to the waterfront or that terminates before reaching the waterfront but adjoins the boundaries of this subdistrict. These view corridors must be of the same width as the adjoining public street, and continue to the waterfront as a straight line extension of the adjoining street. This extension may be modified with approval of a view corridor modification by the Director of Planning.

(2) Building projections into any view corridor may not exceed more than 10% of the width of the corridor and are allowed only on those corridors that are at least 30 feet wide. These projections may encompass up to a maximum of 20% of the building facade fronting the corridor.

(3) Landscaping, exterior lighting, or other public amenities may be located within the view corridor to maximize public view to the water.

(4) Parking is permitted within a view corridor as long as public access areas are maintained and not encroached upon.

(b) *W-2 Overlay Subdistrict*.

(1) View corridors must:

(i) connect existing parks, open-space areas, and new development centers to the waterfront;

(ii) be located no more than 300 feet apart from one another; and

(iii) be at least 60 feet wide.

(2) Landscaping, exterior lighting, or other public amenities may be located within the view corridor to maximize public view of the water.

(3) Parking is permitted within a view corridor, as long as public access areas are maintained and not encroached upon.

(Ord. 16-581; Ord. 17-015.)

§ 12-905. Building requirements.

(a) *Administrative exceptions.*

An administrative exception to the requirements of this section can be granted as provided in § 4-409 {"Administrative exceptions"} of this Code.

(b) *W-1 Overlay Subdistrict*.

(1) Blank walls along the promenade are prohibited. Primary or secondary building entrances are encouraged to be located on facades facing the promenade.

(2) The ground floor of commercial buildings, as measured from grade to the bottom of the second floor, must maintain a transparency of 40%. Windows must be constructed of clear or lightly tinted glass. Tinting above 20% or reflective glass is prohibited. Windows must begin within 3 feet of grade.

(3) No overhead service doors or bays may face the promenade. Loading and service areas must be internal to the development block and accessed through service corridors and not through pedestrian-oriented streets.

(4) Retail uses along the promenade are encouraged. Outdoor extension of these uses are restricted to a maximum of 8 feet into the required promenade easement and must be separated from the paved portion with planting beds, raised planters, or a minimum 2-foot vertical separation. Where planting beds or raised planters are used to provide separation, landscape should be provided in accordance with the Baltimore City Landscape Manual. No extensions of residential structures are permitted.

(5) The height of any structure facing a major public street must be at least 35 feet.

(6) Structures over 60 feet high must be located at least 100 feet from any adjacent structure over 60 feet high.

(7) Parking, whether internal or external, adjoining any promenade easement is prohibited, as described in § 12-906 {"Waterfront public access promenade, open space, and required easements"}.

(c) *W-2 Overlay Subdistrict.*

(1) The floor area ratio within this subdistrict may not exceed a maximum of 2.0. However, mixed-use developments with residential units that constitute 80% or more of the overall development plan are permitted a floor area ratio of 2.5 for the entire development area.

(2) Blank walls along the waterfront are prohibited. Primary or secondary building entrances are encouraged to be located on facades facing the open-space and view corridors.

(3) Loading, service areas, and entrances to parking garages (principal use) must be sited so that they are not visible from the waterfront or view corridors to the greatest extent feasible.

(4) The height of any structure facing a public street must be at least 35 feet.

(Ord. 16-581; Ord. 17-015.)

§ 12-906. Waterfront public access promenade, open space, and required easements.

(a) *W-1 Overlay Subdistrict*.

(1) In addition to the uses allowed by the underlying zoning districts, on waterfront lots within the W-1 Overlay Subdistrict, a continuous public access waterfront promenade, accessible to the public but built and maintained by the owners of the underlying land, must be provided on lots, or development parcels consisting of lots, that adjoin the waterline of the Inner Harbor of the Chesapeake Bay and, where applicable, the Middle Branch of the Patapsco.

(2) A public access promenade must be established by an easement at least 30 feet wide, unless otherwise shown on *Tables 12-903(1)-(4)*, of which at least 12 feet must be a permanently constructed promenade. Those areas of the 30-foot public easement that do not consist of permanently constructed promenade must be landscaped and maintained in a manner that is visible to the public and in accordance with the Landscape Manual. Where it can be demonstrated that it is functionally justified, the Director of Planning may allow a promenade or easement of lesser width. Promenade easements must be recorded by the property owner within 1 month of their approval and a copy of the recordation receipt provided to the Director of Planning.

(3) These required easement improvements must be built and maintained by the property owner. Public access must be available 24 hours a day, 7 days a week unless otherwise agreed to by the Director of Planning and stated in the easement. The completion of the promenade easement area must coincide with the completion of the adjacent development on the property.

(4) Public access corridors are connections between public streets adjoining a waterfront property and the promenade established on the property. All public access corridors must be included in the pedestrian promenade easements for the property in which they are located. The widths of the required corridors may vary but must be at least 12 feet wide. The corridors must be open to the public 24 hours a day, 7 days a week, unless otherwise agreed to by the Director of Planning and stated in the easement, and free of gates or other impeding obstacles. The City may erect signs on these corridors to promote access and rules and regulations for public use. Adequate lighting of these corridors, consistent with the promenade, is required.

(5) No motor vehicles are permitted to use or cross the promenade, unless for emergency or invasive repair purposes. Any proposed road crossing of the promenade, either public or private, requires Planning Commission approval.

(6) No mechanical or service equipment may be located adjacent to the promenade easement unless it is within an enclosed structure or otherwise screened from public view in accordance with the requirements of the Baltimore City Landscape Manual.

(b) *W-2 Overlay Subdistrict*.

(1) In addition to the uses allowed by the underlying zoning districts, on waterfront lots within the W-2 Overlay Subdistrict, a conservation easement, accessible to the public but built and maintained by the owners of the underlying land, must be provided on lots, or development parcels consisting of lots, that adjoin the waterline of Middle Branch of the Patapsco.

(2) A buffer that provides a vegetated habitat area must be established by an easement at least 100 feet wide landward from the mean high water line of tidal waters or from the edge of tidal wetlands and tributary streams, and must be vegetated as specified by the Critical Area Management Program. A 12-foot wide hiking and biking trail must be constructed in this area.

(3) (i) To allow flexibility for development while preserving and creating habitat, the Director of Planning may approve a reduction of the 100-foot wide buffer to not less than 50 feet (from the mean high water line) if:

(A) the areas of impact are replaced with areas elsewhere on the sites controlled by the same developer; or

(B) there is an outfall or other limiting physical condition, as indicated on the zoning map.

(ii) The replacement areas must be:

(A) of equal or greater size than the area being transferred and placed under easement; and

(B) adjoining a habitat area.

(iii) Both the transferred habitat area and the contiguous habitat area must be properly vegetated as specified by the Critical Area Management Program.

(4) Stormwater from the entire site must be managed to prevent negative impacts to the buffer.

(5) The hiking and biking trail, together with a 12-foot hard surface and a meadow or mown strip a maximum of 3 feet wide on either side, must be at least 50 feet from the mean high tide line. Public access corridors to the trail must be provided and included in the easements for the property where they are located. The trail on any given property must connect to the trail on adjoining properties. The trail takes the place of the promenade and these hard surfaces are exempt from the Critical Area buffer requirement, but are not exempt from stormwater requirements.

(6) Access to the water as part of the trail system is encouraged, and must be approved by the Director of Planning.

(7) Easements for the buffer and the hiking and biking trail must be recorded by the property owner once approved and a copy of the easements, stamped at the courthouse, provided to the Director of Planning.

(8) These required easement improvements must be built and maintained by the property owner. Public access on private property is subject to reasonable rules and regulations adopted by the property owner and included in the easement. The completion of the easement area must coincide with the completion of the adjacent development on the property.

(9) The shoreline must be maintained as a naturally vegetated buffer. No new bulkheads or rip-rap may be constructed and any existing bulkheads or rip-rap must be removed to the greatest extent possible as development occurs. Additionally, wetland marsh creation, restoration, and preservation are encouraged.

(10) Any work done in designated habitat protection areas, resource conservation areas, or existing vegetated buffers must be scheduled so that it does not disturb the reproductive cycles of fish or wildlife.

(11) No motor vehicles are permitted to use or cross the hiking and biking trail, unless required for an emergency or for trail or buffer maintenance purposes.

(12) No mechanical or service equipment may be located adjacent to the conservation easement unless it is within an enclosed structure or otherwise screened from public view in accordance with the requirements of the Baltimore City Landscape Manual.

(Ord. 16-581; Ord. 17-015.)

SUBTITLE 10
ROWHOUSE MIXED-USE OVERLAY DISTRICTS

§ 12-1001. Applicability.

(a) *In general.*

A Rowhouse Mixed-Use Overlay District may be applied to rowhouse dwellings in the R-5, R-6, R-7, R-8, R-9, R-10, and OR Districts. This Overlay District allows the rowhouse dwelling to be used for 1 of the non-residential uses listed in § 12-1003 {"Use regulations"} of this subtitle.

(b) *Initial conversion requires BMZA approval*.

A rowhouse dwelling's initial conversion from a residential use to a non-residential use listed in § 12-1003 {"Use regulations"} of this subtitle requires conditional-use approval by the Board of Municipal and Zoning Appeals.

(Ord. 16-581; Ord. 17-015.)

§ 12-1002. Minimum size of district.

An R-MU Overlay District may only be applied to a minimum of:

(1) 50% of the blockface; or

(2) two opposing corner lots.

(Ord. 16-581; Ord. 17-015.)

§ 12-1003. Use regulations.

(a) *Permitted non-residential uses.*

In an R-MU Overlay District, 1 (but no more than 1) of the following non-residential uses is permitted on the ground floor of a rowhouse structure:

(1) Art gallery.

(2) Arts studio.

(3) Day-care center: Adult or child (See § 14-309 for use standards).

(4) Office.

(5) Personal services establishment.

(6) Restaurant.

(7) Retail goods establishment – no alcoholic beverage sales.

(b) *Conditional uses.*

In an R-MU Overlay District, the following uses are conditional uses requiring approval by the Board of Municipal and Zoning Appeals:

(1) Outdoor Dining (*See* § 14-329 for use standards).

(2) Initial conversion of a rowhouse dwelling from a residential use to a non-residential use listed in subsection (a) of this section.

(3) Use of upper floor for a non-residential use listed in subsection (a) of this section.

(Ord. 16-581; Ord. 17-015.)

§ 12-1004. Bulk and yard regulations.

(a) *In general.*

The bulk and yard regulations for rowhouses in the underlying zoning district apply to a Rowhouse Mixed-Use Overlay District, except as provided in subsection (b) of this section.

(b) *Exception.*

Subsection (a) does not apply to the minimum lot area for a non-residential use that was converted under this subtitle from a residential use. In that case, the minimum lot area requirement for the prior residential use applies.

(Ord. 16-581; Ord. 17-015.)

§ 12-1005. Design and performance standards.

(a) *In general.*

The design standards for rowhouse dwellings in the underlying zoning district apply to a Rowhouse Mixed-Use Overlay District.

(b) *Additional standards.*

(1) Conversion of a rowhouse to a use allowed by § 12-1003 {"Use regulations"} of this subtitle requires design review. This conversion is subject to the following design and performance standards.

(2) The ground floor of the structure may be used for a non-residential use listed in § 12-1003 {"Use regulations"} of this subtitle. The upper floors of the structure may be used for office uses related to that ground-floor business, as long as the upper floors are not open to the public. For all other non-residential uses, conditional-use approval by the Board of Municipal and Zoning Appeals is required for the use of the upper floors of a structure for the non-residential uses listed in § 12-1003 {"Use regulations"} of this subtitle.

(3) The residential form of the building must be generally maintained. However, ground-floor windows and doors may be enlarged for improved visibility and access.

(4) The principal entrance must be a direct entry from the primary abutting street.

(5) No additional off-street parking is required.

(6) Outside storage or display is prohibited. All business, servicing, processing, and storage uses must be located within the structure.

(7) Signs are limited to wall, projecting, window, awning, and temporary a-frame signs only.

(8) Signs must comply with the following limitations:

(i) Signs are limited to the name or description of the use.

(ii) Temporary A-frame signs are permitted with a permit and are subject to the regulations in § 17-702 {"A-frame signs"} of this Code.

(Ord. 16-581; Ord. 17-015.)

SUBTITLE 11
DETACHED DWELLING MIXED-USE OVERLAY DISTRICTS

§ 12-1101. Applicability.

(a) *In general.*

A Detached Dwelling Mixed-Use Overlay District may be applied to detached dwellings. This Overlay District allows the detached dwelling to be used for 1 of the non-residential uses listed in § 12-1103 {"Use regulations"}.

(b) *Initial conversion requires BMZA approval*.

A detached dwelling's initial conversion from a residential use to a non-residential use listed in § 12-1103 {"Use regulations"} of this subtitle requires conditional-use approval by the Board of Municipal and Zoning Appeals.

(Ord. 16-581; Ord. 17-015.)

§ 12-1102. Minimum size of district.

A D-MU Overlay District may only be applied to a minimum of:

(1) 50% of the blockface; or

(2) two opposing corner lots.

(Ord. 16-581; Ord. 17-015.)

§ 12-1103. Use regulations.

(a) *Permitted non-residential uses***.**

In a D-MU Overlay District, 1 (but no more than 1) of the following non-residential uses is permitted on the ground floor of a detached dwelling:

(1) Art gallery.

(2) Arts studio.

(3) Day-care center: Adult or child (*See* § 14-309 for use standards).

(4) Office.

(b) *Conditional uses.*

In a D-MU Overlay District, the following uses are conditional uses requiring approval by the Board of Municipal and Zoning Appeals:

(1) Initial conversion of a detached dwelling from a residential use to a non-residential use listed in subsection (a) of this section.

(2) Use of upper floor for a non-residential use listed in subsection (a) of this section.
(Ord. 16-581; Ord. 17-015.)

§ 12-1104. Bulk and yard regulations.

The bulk and yard regulations for detached dwellings in the underlying zoning district apply to a D-MU Overlay District.
(Ord. 16-581; Ord. 17-015.)

§ 12-1105. Design and performance standards.

(a) *In general.*

The design standards for detached dwellings in the underlying zoning district apply to a D-MU Overlay District**.**

(b) *Additional standards.*

(1) Conversion of the structure to a use allowed by §12-1103 {"Use regulations"} of this subtitle requires design review. This conversion is subject to the following design and performance standards.

(2) The ground floor of the structure may be used for a non-residential use listed in § 12-1003 {"Use regulations"} of this subtitle. The upper floors of the structure may be used for office uses related to that ground-floor business, as long as the upper floors are not open to the public. For all other non-residential uses, conditional-use approval by the Board of Municipal and Zoning Appeals is required for the use of the upper floors of a structure for the non-residential uses listed in § 12-1003 {"Use regulations"} of this subtitle.

(3) The residential form of the building must be generally maintained.

(4) The principal entrance must be a direct entry from the primary abutting street.

(5) No additional off-street parking is required.

(6) Outside storage or display is prohibited. All business, servicing, processing, and storage uses must be located within the structure.

(7) Signs are limited to wall and projecting signs only.

(8) Signs must comply with the following limitations:

(i) Signs are limited to the name or description of the use.
(Ord. 16-581; Ord. 17-015.)

SUBTITLE 12
ADULT USE OVERLAY DISTRICT

§ 12-1201. Applicability

The Adult Use Overlay District may be applied only within the C-5 District.
(Ord. 16-581.)

§ 12-1202. Use regulations.

(a) *Permitted uses.*

All permitted uses in the underlying zoning district are allowed as permitted uses within the Adult Use Overlay District.

(b) *Conditional Uses.*

(1) All conditional uses in the underlying zoning district are allowed as conditional uses within the AU Overlay District.

(2) In addition, the following uses are conditional uses, requiring approval by the Board of Municipal and Zoning Appeals:

(i) Adult uses (*See* § 14-301 for use standards).
(Ord. 16-581.)

§ 12-1203. Bulk and yard regulations.

The bulk and yard regulations of the underlying zoning district apply to the AU Overlay District.
(Ord. 16-581.)

§ 12-1204. Establishment of adult use.

(a) *In general.*

(1) The establishment of an adult use within the City is a 2-step process:

(i) First an area must be zoned as an Adult Use Overlay District, in accordance with the provisions of this subtitle, the zoning amendment process of Title 5, Subtitle 5 {"Legislative Authorizations"} of this Code, and the additional approval standards of subsection (b) of this section.

(ii) Once the area is rezoned, a conditional use may be applied for to establish the adult use, in accordance with the provisions of this subtitle, the conditional use process of Title 5, Subtitle 4 {"Conditional Uses"} of this Code, and any additional use and development standards of this Code.

(2) A conditional use may be applied for to establish an adult use in an area already zoned as an AU Overlay District.

(b) *Additional zoning amendment approval standards*.

(1) In addition to the general standards for zoning map amendments, as set forth in § 5-406 {"Approval standards"} of this Code, the following standards must be met.

(2) The adult use must be so designed, located, and operated so that the public health, safety, and welfare will be protected.

(3) The adult use may not unduly increase traffic congestion in the public streets of the area in which it is located.

(4) The adult use may not cause additional public expense for fire or police protection.

(5) No adult use may be conducted in any manner that permits the observation, from any public way or adjacent property, of any material that depicts, describes, or relates to specified sexual activities or specified anatomical areas. This applies to any display, decoration, sign, show window, or other opening.

(c) *Conditional use standards.*

Adult uses must meet the standards of § 14-301 {"Adult uses"} of this Code.
(Ord. 16-581.)

SUBTITLE 13. PORT COVINGTON DISTRICT

§ 12-1301. Subdistricts.

4 Subdistricts are established to accommodate and encourage redevelopment of the Port Covington area, along the north shore of the Middle Branch of the Patapsco River, as follows:

(1) The PC-1 Subdistrict is characterized by commercial use, entertainment, attractions, open-space, waterfront, and recreation amenities that create a focal point within the Port Covington Zoning District. The standards recognize that development within this subdistrict is to be ecologically sustainable, oriented to both the street edges and the Middle Branch Waterfront, and predominantly pedestrian-oriented. Development is generally mid-scale to promote connectivity between the waterfront and adjoining subdistricts.

(2) The PC-2 Subdistrict is characterized by a wide mix of uses, including residential, commercial, office, open-space, recreation, and entertainment amenities, waterfront, and light industrial in a dense urban setting. The standards recognize that the development in this subdistrict is to accommodate a high-density, walkable, mixed-use environment.

(3) The PC-3 Subdistrict is characterized by a wide mix of uses, including residential, commercial, office, open-space, recreation, and entertainment amenities, as well as industrial uses as part of a live-work-play community. The standards recognize that this subdistrict is designed to accommodate the transition from an historically industrial area to a medium-density, walkable, mixed-use environment.

(4) The PC-4 Subdistrict is characterized as an office-industrial campus on the waterfront that can accommodate the international headquarters of a major corporation. The standards are intended for architecturally coordinated office and industrial structures built in a campus-like atmosphere, which includes a focus on recreation amenities. This subdistrict provides standards to promote ecologically sustainable design and accommodate a high-density, walkable environment for this waterfront campus.

(Ord. 16-581; Ord. 17-015.)

§ 12-1302. Use regulations.

Only those uses listed in *Table 12-1302: Port Covington District – Permitted and Conditional Uses* are allowed within the PC Subdistricts.

(Ord. 16-581; Ord. 17-015.)

§ 12-1303. Bulk and yard regulations.

(a) *In general.*

Table 12-1303: Port Covington District – Bulk and Yard Regulations sets forth the applicable bulk and yard regulations for the PC Subdistricts.

(b) *Measurement methodologies*.

Measurement methodologies are as set forth in Title 15, Subtitle 3 {"Measurement Methodologies"} of this Code.

(c) *Exceptions and requirements.*

Exceptions and requirements are as set forth in Title 15, Subtitle 4 {"Exceptions and Requirements"} of this Code.

(Ord. 16-581; Ord. 17-015.)

§ 12-1304. Other applicable standards.

(a) *In general.*

The PC Subdistricts are also subject to the standards listed in this section.

(b) *Accessory structures and uses.*

Standards governing accessory structures and uses are set forth in Title 15, Subtitle 5 {"Accessory Structures and Uses"} of this Code.

(c) *Site development.*

On-site development standards are set forth in Title 15 {"Site Development Standards"} of this Code.

(d) *Off-Street parking and loading.*

Standards governing off-street parking and loading are set forth in Title 16 {"Off-Street Parking and Loading"} of this Code.

(e) *Landscaping and screening.*

All landscaping and screening must comply with the requirements of the Baltimore City Landscape Manual.

(f) *Signs.*

Standards governing signs are set forth in Title 17 {"Signs"} of this Code.

(g) *Temporary Uses.*

Standards governing temporary uses are set forth in Title 14, Subtitle 4 {"Temporary-Use Standards"} of this Code.

(Ord. 16-581; Ord. 17-015.)

{PAGE LEFT INTENTIONALLY BLANK}

TITLE 13
PLANNED UNIT DEVELOPMENTS

SUBTITLE 1
PURPOSE; TRANSITION RULES

§ 13-101. Purpose.

The purpose of a planned unit development is to:

(1) encourage flexibility in the development of land and in the design of structures;

(2) encourage a creative approach to the use of land that results in better development and design than might otherwise be accomplished under the strict application of this Code on a lot-by-lot basis;

(3) provide for the efficient use of land to facilitate a more effective arrangement of land uses, buildings, circulation systems, and utilities;

(4) encourage the construction of appropriate aesthetic amenities that will enhance the character of the site;

(5) promote quality development that is commensurate with other development within the community and compatible with the character of the surrounding area and adjacent properties; and

(6) facilitate the implementation of the Comprehensive Master Plan.

(Ord. 16-581.)

§ 13-102. Transition rules.

(a) *In general.*

Residential, office-residential, business, and industrial planned unit developments approved before the effective date of this Code (June 5, 2017) remain valid as long as they continue to comply with all requirements and conditions of their approvals and of the Zoning Code regulations in effect immediately preceding that effective date.

(b) *Amendments.*

Any amendments to these previously approved planned unit developments will be categorized as either engineering corrections, minor changes, or major changes in accordance with Subtitle 4 {"Modifications to approved final development plans"} of this title and must follow the corresponding approval procedure.

(c) *Allowed uses*.

All permitted and conditional uses of the underlying zoning district of a previously approved planned unit development are allowed unless specifically prohibited by the planned unit development.

(Ord. 16-581; Ord. 17-015.)

SUBTITLE 2
REQUIREMENTS; APPROVAL STANDARDS; EXCEPTIONS

§ 13-201. Authorization.

(a) *In general.*

Planned unit developments must be established by ordinance of the Mayor and City Council in accordance with the provisions of this title.

(b) *Requirements of underlying district.*

Unless otherwise specifically provided by the ordinance establishing or amending the planned unit development, all requirements of the underlying zoning district apply.

(c) *PUDs precluded from certain districts.*

Planned unit developments are prohibited in the I-1, I-2, and MI Districts.
(Ord. 16-581; Ord. 17-015.)

§ 13-202. General requirements.

(a) *Common ownership or unified control*.

(1) The site of the planned unit development must be under common ownership or unified control.

(2) If there are 2 or more owners, the application for approval of a planned unit development or for approval of an amendment to an approved planned unit development must be jointly filed by all owners.

(b) *Minimum areas.*

Planned unit developments must meet the following minimum areas:

(1) at least 5 acres in the R-1A, R-1B, R-1C, R-1D, R-1E, R-1, R-2, R-3, R-4, R-5, OIC, and BSC Districts;

(2) at least 2 acres in the R-6, R-7, R-8, R-9, R-10, C-1, C-2, C-3, C-4, I-MU, TOD, OR, and PC Districts; and

(3) at least 1½ acres in the C-5 District.

(c) *Exceptions.*

Exceptions to the regulations contained in this Code, including use, bulk, yard, parking, and sign regulations, may be granted through the planned unit development process, as may be

desirable to achieve the objectives of the proposed planned unit development, as long as the exceptions are fully consistent with and authorized by this title.

(Ord. 16-581; Ord. 17-015.)

§ 13-203. Approval standards.

(a) *In general.*

In reviewing a planned unit development:

(1) the conditional use standards of § 5-405(a) {"Conditions: In general"} and § 5-406 {"Approval standards"}of this Code apply; and

(2) the following additional factors must be considered:

(i) whether the planned unit development is in general conformance with all elements of the Comprehensive Master Plan, and the character and nature of existing and contemplated development in the vicinity of the proposed planned unit development;

(ii) whether the planned unit development will preserve unusual topographic or natural features of the land, and the design of the planned unit development will best utilize and be compatible with the topography of the land;

(iii) whether the physical characteristics of the planned unit development will not adversely affect future development or the value of undeveloped neighboring areas, or the use, maintenance, or value of neighboring areas already developed;

(iv) whether the planned unit development will provide the same protection as the basic district regulations in regard to fire, health hazards, and other dangers;

(v) whether the planned unit development will encourage innovative design features or adaptive reuse of structures that would not be possible by application of the basic district regulations; and

(vi) whether the planned unit development is compatible with any nearby industrial district.

(b) *Required findings.*

The planned unit development may be approved only if there are findings that:

(1) the use is compatible with the surrounding neighborhood;

(2) the use furthers the purpose of the proposed classification; and

(3) the PUD master plan developed under § 13-304 {"PUD master plan"} of this title ensures that there will be no discordance with existing uses.

(Ord. 16-581.)

§ 13-204. Exceptions from district regulations.

(a) *Considerations*

In determining whether to grant an exception from district regulations, the Planning Commission and City Council must consider whether the exception will:

(1) enhance the overall merit of the planned unit development;

(2) promote the objectives of both the City and the development;

(3) enhance the quality of the design of the structures and the site plan;

(4) enable the development to offer environmental and pedestrian amenities;

(5) not cause such an adverse impact on neighboring properties so as to outweigh the benefits of the development;

(6) not negatively affect the value and enjoyment of surrounding property, the provision of municipal services, or the flow of traffic;

(7) be compatible with the land use policies of the Comprehensive Master Plan;

(8) provide a substantial public benefit to the City, as illustrated in subsection (d) of this section; and

(9) allow uses that predominantly match or are compatible with uses allowed in the underlying zoning district and the zoning districts of adjacent properties.

(b) *Required Superior design and amenities.*

To be granted an exception, the applicant must demonstrate superior design and enhanced amenities.

(c) *Required benefit to City.*

In no case may any exception be granted unless the applicant demonstrates a substantial benefit to the City.

(d) *Examples of substantial benefit to City.*

Examples of substantial benefits to the City are as follows:

(1) use of sustainable design and architecture, such as green roofs, white roofs, and other energy efficient design concepts, new building technologies, and qualifying as a Leadership in Energy and Environmental Design ("LEED") or LEED-equivalent structure;

(2) enhanced design characteristics, including mixed-use development, circulation systems that utilize alleys or traffic-calming techniques, and a pedestrian-oriented environment;

(3) community amenities, including plazas, malls, formal gardens, places to congregate, outdoor seating, public art, and pedestrian and transit facilities;

(4) preservation of natural areas and site design that is sensitive to environmental features;

(5) historic preservation and adaptive reuse of historic structures;

(6) additional open-space and recreational amenities, such as recreational open space and playgrounds, including athletic fields, dog parks, natural water features, and conservation areas;

(7) additional public infrastructure improvements, in addition to the minimum needed by the planned unit development, such as new or repaved streets, bicycle paths, gutters and sewers, and traffic control devices to improve traffic flow;

(8) senior housing set-aside;

(9) affordable housing set-aside;

(10) provision of accessible dwelling units with accessible features beyond those required by the Americans with Disabilities Act or any other applicable codes; and

(11) provision of public car or bike share facilities.

(Ord. 16-581.)

SUBTITLE 3
PROCEDURES FOR PLAN APPROVAL

§ 13-301. In general.

(a) *4-step process*.

Approval of a planned unit development is a 4-step process comprising:

(1) preliminary consultation;

(2) concept plan;

(3) PUD master plan; and

(4) final development plan.

(b) *Compliance required.*

The procedures, requirements, restrictions, and conditions of this title must be observed in the authorization of a planned unit development.

(c) *Introduction of legislation*.

(1) In accordance with Title 5, Subtitle 5 {"Legislative Authorizations"}, of this Code, at the request of a property's owner or developer, 1 or more members of the City Council may introduce a legislative authorization to approve, amend, or repeal a planned unit development and PUD master plan.

(2) On referral of the bill for the legislative authorization to the Planning Commission, as required by Title 5, Subtitle 5:

(i) the property owner or developer seeking the legislative authorization is considered the applicant for purposes of this title; and

(ii) the procedures of this subtitle apply.

(Ord. 16-581.)

§ 13-302. Preliminary consultation.

(a) *Consultation required.*

Before filing any plans for a planned unit development, the applicant must attend a preliminary consultation with the Director of Planning. This consultation must take place before or as soon as possible after introduction of the bill seeking the legislative authorization for the planned unit development.

(b) *Information to be submitted.*

For the preliminary consultation, the applicant must provide the following information:

(1) location of the proposed development;

(2) proposed uses;

(3) proposed public and private improvements;

(4) a list of any exceptions to district requirements that the applicant anticipates will be requested; and

(5) any other information necessary to clearly explain the planned unit development.

(c) *Purpose of consultation.*

The purpose of the preliminary consultation is to make advice and assistance available to the applicant before preparation of the concept plan, so that the applicant may determine:

(1) whether the proposed planned unit development appears in general to be in compliance with the provisions of this Code and other applicable regulations;

(2) whether any zoning exceptions are required in connection with the proposed planned unit development; and

(3) whether the proposed planned unit development will be in conformity with the Comprehensive Master Plan and the goals and policies of the City for development.

(d) *Application and fee.*

The preliminary consultation does not require the filing of an application or payment of a fee.

(e) *Opinions given not binding.*

Opinions or advice provided at the consultation are in no way binding on the Planning Commission or the City Council when later taking formal action on the planned unit development.

(Ord. 16-581.)

§ 13-303. Concept plan.

(a) *Submission to Commission.*

After the preliminary consultation, the applicant must file a concept plan with the Planning Director for the purpose of obtaining information and guidance from the Planning Commission before the applicant enters into binding commitments or incurs substantial expense.

(b) *Plan components.*

At minimum, the concept plan must consist of the following:

(1) a site plan that is drawn to an appropriate scale and, in general form, shows:

(i) proposed land uses and structures;

(ii) natural features of the development site;

(iii) approximate location of all roadways and access drives proposed within the planned unit development; and

(iv) location of all adjacent public streets, thoroughfares, and public utilities;

(2) a site location map that is drawn to an appropriate scale and shows:

(i) the proposed planned unit development in relation to surrounding streets and property within 600 feet in all directions of the development site; and

(ii) the location, height, and land use of all existing buildings and structures adjoining the development site;

(3) schematic drawings that show the size, gross square footage, character, and disposition of buildings currently existing on the site and buildings proposed for the site; and

(4) a written statement that contains:

(i) a general explanation of the planned unit development;

(ii) a statement of the present ownership of all the land within the development;

(iii) a schedule setting forth any proposed exceptions to district requirements, including exceptions to the regulations governing use, bulk, yard, off-street parking, and signs, as they apply to the zoning district or districts in which the planned unit development is to be located; and

(iv) proposed public benefits and amenities.

(c) *Commission to provide guidance.*

The Planning Commission must review the concept plan and provide the information and guidance that it considers appropriate.

(d) *Opinions given not binding.*

Opinions or advice provided by the Planning Commission are in no way binding on the Planning Commission or the City Council when later taking formal action on the planned unit development.

(e) *Review to be at public meeting.*

The review of the concept plan is a public meeting. Public comment on the concept plan will be accepted at that meeting. Notice of the meeting must be given as specified by the Director of Planning in accordance with the Planning Commission's rules and regulations and the State Open Meetings Act (Title 3 of the State General Provisions Article).

(Ord. 16-581.)

§ 13-304. PUD master plan.

(a) *Purpose of plan.*

The purpose of the PUD master plan is to serve as the legislatively approved plan encompassing all major aspects of site development and public benefits. Where certain elements of site design are unknown, it is sufficient to reflect intent as provided in this section.

(b) *Plan components.*

The PUD master plan must include the following:

(1) an accurate topographic and boundary line map of the project area;

(2) a location map that shows the relationship of the project area to surrounding properties;

(3) the pattern and intended design standards of existing and proposed roads, driveways, parking facilities, and bicycle and pedestrian paths, whether public or private;

(4) the use, type, size, arrangement, and location of existing and proposed lots, structures, and building groups;

(5) a general plan for landscaping that demonstrates design intent and how environmental requirements will be met;

(6) architectural drawings and sketches that illustrate the design and character of proposed structures;

(7) the general location of existing and proposed sewer and water facilities;

(8) the existing topography and storm drainage pattern;

(9) the proposed storm drainage system, showing basic topographic changes;

(10) the location of recreational and open-space areas and areas reserved or dedicated for public uses, such as school and park sites, and any open space to be owned and maintained by a property owners' association;

(11) statistical data on:

(i) the total size of the project area;

(ii) density computations;

(iii) the proposed number of residential units, by type; and

(iv) any other similar factors pertinent to a comprehensive evaluation of the proposed planned unit development;

(12) a detailed time schedule for the start and completion of the planned unit development, including a proposed phasing schedule, which must indicate when the public benefits and amenities will be constructed; and

(13) a schedule setting forth any proposed exceptions to district regulations, citing by section number each regulation from which an exception is sought.

(c) *Planning Commission review.*

(1) Before a public hearing is scheduled, the proposed PUD master plan must be forwarded to the appropriate City agencies, as determined by the Director of Planning, for review. These agencies must review the proposed PUD master plan and forward their reports to the Planning Commission within 30 days of receipt of the plan. The Planning Commission must schedule a public hearing on the proposed PUD master plan within 60 days of receipt of a complete application.

(2) If, in the Planning Commission's judgment, the application does not contain sufficient information to enable it to properly discharge its responsibilities, the Planning Commission may request additional information from the applicant and the 60 day period is suspended or the hearing continued.

(3) The Planning Commission may recommend approval, recommend approval with conditions, or advise the applicant in writing of any recommended changes, additions, or corrections to the proposed PUD master plan. If the Planning Commission recommends changes, additions, or corrections, the applicant may, within 30 days of the recommendation, submit a revised proposed PUD master plan for Planning Commission consideration, without paying an additional filing fee. The Planning Commission may grant the applicant additional time to prepare the revised plan. Once resubmitted, the Planning Commission may then recommend approval, approval with conditions, or denial of the proposed PUD master plan.

(d) *Recommendations to City Council.*

The Planning Commission's final determination regarding a proposed PUD master plan must be:

(1) included in the Planning Commission's report to the Mayor and City Council under § 5-506 of this Code if the planned unit development is the subject of a proposed legislative authorization that has already been introduced under § 13-301(c) of this title; or

(2) retained by the Planning Commission for at least 12 months from the date the Planning Commission makes a final determination and included in the Planning Commission's report under § 5-506 of this Code if, within that 12-month period, the planned unit development becomes the subject of a legislative authorization.

(Ord. 16-581.)

§ 13-305. Final development plan.

(a) *Purpose of plan.*

The purpose of the final development plan is to provide, after enactment of the ordinance approving the planned unit development and its PUD master plan, additional detailed information on all aspects of site development and public benefits once construction is imminent. Whereas the PUD master plan may reflect design intent, the final development plan must reflect actual and final proposed conditions. The Planning Commission may not approve the final development plan, as provided in this section, unless the final development plan substantially complies with the PUD master plan.

(b) *When required.*

(1) Within 2 years after enactment of the ordinance approving or amending the planned unit development and its PUD master plan, the applicant must file a final development plan with the Director of Planning, together with the applicable filing fee.

(2) If the PUD master plan was approved to be constructed in phases, the applicant must submit the final development plan for the first phase within 2 years of the approval of the PUD master plan. Final development plans for subsequent phases may be submitted according to the phasing schedule approved as part of the PUD master plan.

(c) *Plan components.*

The final development plan must include the following, in final form:

(1) the plan components required by § 13-304(b) {"PUD master plan: Plan components"} of this subtitle, updated as required to reflect actual and final proposed conditions;

(2) the final location, type, and size of proposed landscaping features; and

(3) final architectural drawings and sketches that illustrate the design and character of proposed structures.

(d) *Conformance review.*

(1) The Director of Planning must review the final development plan within 60 days of its receipt and take actions described in this subsection.

(2) The Director of Planning may recommend approval of the final development plan to the Planning Commission if it is in substantial compliance with the PUD master plan and all City regulations. The Director of Planning will certify to the Planning Commission that the final plan is in substantial conformance with the PUD master plan and City regulations. Within 60 days of receipt of the Director of Planning's recommendation, the Planning Commission must review the final development plan and approve or deny it at a public meeting.

(3) If the Director of Planning finds that the final development plan is substantially changed from the PUD master plan, or is otherwise not in accordance with City regulations, then the Director of Planning may recommend to the Planning Commission that the final development plan be denied. If the Planning Commission finds that the final development plan is not in conformity with the PUD master plan or City regulations, the Director of Planning must inform the applicant of the specific areas found not to be in compliance, and the applicant may resubmit the final development plan to the Director of Planning with changes to those areas found not to be in compliance.

(4) Once resubmitted and the Director of Planning has determined the final development plan to be in substantial compliance with the PUD master plan and City regulations, the Director of Planning must certify to the Planning Commission that the final development plan is in substantial conformance with the PUD master plan and City regulations. Within 60 days of receipt of the Director of Planning's recommendation, the Planning Commission must review the final development plan and approve or deny it at a public meeting.

(5) Before final approval of the final development plan, the Planning Commission may approve minor changes to the final development plan that do not conflict with the PUD master plan and City regulations. The minor changes that may be approved by the Planning Commission are limited to those that qualify as minor variances under § 5-302(b) {"Minor and major Variances: Minor variances"} of this Code.

(e) *Approved final development plan.*

After the approval of a final development plan by the Planning Commission, the use of the land and the construction, modification, or alteration of any structures within the planned unit development are governed by the approved final development plan rather than by the provisions of this Code.

(Ord. 16-581.)

SUBTITLE 4
MODIFICATIONS TO APPROVED FINAL DEVELOPMENT PLANS

§ 13-401. Engineering corrections.

(a) *Director may approve.*

(1) During construction only, minor changes required by engineering or other physical site circumstances not foreseen at the time that the final development plan was approved, but encountered during construction on site, may be authorized by the Director of Planning.

(2) However, the Director of Planning may not approve any change:

(i) that fails to substantially comply with the PUD master plan or City regulations; or

(ii) that violates:

(A) the underlying zoning;

(B) an approved exception;

(C) a condition of approval attached to the planned unit development; or

(D) a provision of the ordinance that approved or amended the planned unit development.

(3) The Director of Planning may not approve any engineering correction for a site that has not had building permits issued.

(b) *Revised development plan.*

(1) A revised final development plan showing all changes proposed under this section must be submitted to the Director of Planning, with these changes indicated by marked-up or red-lined exhibit of plans.

(2) The revised final development plan proposed under this section must be reviewed and approved or denied by the Director of Planning within 15 days.

(3) A new final development plan, reflecting the changes approved under this section, must be filed with the Department of Planning, noting the date of the changes.

(Ord. 16-581.)

§ 13-402. Minor changes.

(a) *Commission may approve.*

(1) The Planning Commission may approve a change to the approved final development plan that is not a major change governed by § 13-403 {"Major changes"} of this subtitle.

(2) However, the Planning Commission may not approve any change:

(i) that fails to substantially comply with the PUD master plan or City regulations; or

(ii) that violates:

(A) the underlying zoning;

(B) an approved exception;

(C) a condition of approval attached to the planned unit development, with the exception of modifications to the planned unit development's phasing schedule; or

(D) a provision of the ordinance that approved or amended the planned unit development.

(b) *Revised development plan.*

(1) A revised final development plan showing all changes proposed under this section must be submitted to the Director of Planning, with these changes indicated by marked-up or red-lined exhibit of the plans. The Director of Planning must forward the revisions to the Planning Commission.

(2) The Planning Commission must review the revised final development plan and approve, approve with conditions, or deny it within 30 days of its submittal.

(3) A new final development plan, reflecting the changes approved under this section, must be filed with the Department of Planning, noting the date of the changes.

(Ord. 16-581.)

§ 13-403. Major changes.

(a) *Scope of section.*

This section applies to the following major changes:

(1) a 10% increase or 25% decrease in the approved number of dwelling units;

(2) a 10% increase or a 25% decrease in the maximum building heights in the approved planned unit development;

(3) a change in the type, location, or arrangement of land use within the development, as shown on the previously approved final development plan;

(4) a change in the boundaries of the planned unit development;

(5) a decrease in open space that had been included as a public benefit or amenity under § 13-204 {"Exceptions from district regulations"} of this title; and

(6) any change:

(i) that fails to substantially comply with the PUD master plan or City regulations; or

(ii) that violates:

(A) the underlying zoning;

(B) an approved exception;

(C) a condition of approval attached to the planned unit development, with the exception of modifications to the planned unit development's phasing schedule; or

(D) a provision of the ordinance that approved or amended the planned unit development.

(b) *Change requires repeal of plan and resubmittal.*

A major change requires:

(1) the repeal of the ordinance that approved the planned unit development; and

(2) introduction and enactment of an ordinance to approve a new planned unit development and PUD master plan.

(Ord. 16-581.)

SUBTITLE 5
ENFORCEMENT

§ 13-501. Ordinance and development plan as binding agreement.

The ordinance and approved final development plan constitute a binding agreement by the property owner and the developer to proceed with the development in strict accordance with the approved final development plan, including the detailed time schedule.
(Ord. 16-581; Ord. 17-015.)

§ 13-502. Expiration on failure to proceed timely.

(a) *In general.*

An approved planned unit development and final development plan automatically expire 2 years after the date of approval if:

(1) a building permit has not been issued; or

(2) the installation of required infrastructure has not begun.

(b) *Extension of time.*

(1) The Planning Commission may extend the time for expiration of an approved planned unit development and final development plan on:

(i) a written request for extension that is submitted before the expiration; and

(ii) for good cause shown.

(2) The Planning Commission must conduct a public hearing to determine whether to terminate or extend the approval.

(3) In making its determination, the Planning Commission must take into account:

(i) hardship to the applicant;

(ii) changes in surrounding circumstances that have occurred since the original approval;

(iii) the schedule for providing required public benefits and amenities; and

(iv) the likelihood that substantial construction will occur during any period of extension.

(Ord. 16-581.)

§ 13-503. Noncompliance.

(a) *Cause for cancelling development plan.*

Failure to comply with the requirements set by or under authority of this title is cause for canceling the planned unit development and final development plan.

(b) *Notice.*

The Zoning Administrator must provide the property owner and the developer at least 15 days notice to appear before the Zoning Administrator and answer to any charge of noncompliance.

(c) *Action by Administrator.*

If the Zoning Administrator finds the charges to be substantiated and if the situation is not satisfactorily adjusted within a specified period set by the Zoning Administrator, the Zoning Administrator may:

(1) order cancellation of the planned unit development and final development plan; and

(2) take any other action that is appropriate.

(Ord. 16-581; Ord. 17-015.)

TITLE 14
USE STANDARDS

SUBTITLE 1
PURPOSE OF TITLE

§ 14-101. Purpose.

The purpose of this Title is to set forth additional requirements for certain permitted and conditional uses found within the district use tables. These standards are intended to ensure that a use is compatible with the surrounding area.

(Ord. 16-581.)

SUBTITLE 2
APPLICABILITY OF USE STANDARDS

§ 14-201. Use of land and structure.

No structure or land may be used or occupied except in conformity with the regulations for the zoning district in which it is located. No structure may be erected, reconstructed, extended, enlarged, altered, or moved except in conformity with the regulations of the zoning district in which it is located.

(Ord. 16-581.)

§ 14-202. Additional standards

In addition to the use standards of Subtitle 3 of this title, all uses are required to comply with all provisions of this Code, including Title 15 {"Site Development Standards"}, Title 16 {"Off-Street Parking and Loading"}, and Title 17 {"Signs"}, and all other City regulations.

(Ord. 16-581.)

SUBTITLE 3
USE STANDARDS

§ 14-301. Adult uses.

(a) *In general.*

The establishment, location, construction, maintenance, and operation of an adult use may not be detrimental to or endanger the public health, safety, or welfare.

(b) *Effect on community.*

When reviewing a proposed adult use, the following must be considered:

(1) the adverse secondary effects of the proposed use on the community; and

(2) in addition to determining compliance with subsection (c) of this section, the distance between the proposed use and existing adult uses in the area, to determine if a negative impact on the community will result.

(c) *Distance from other uses.*

Any new adult use must be at least 300 feet distant from any existing adult use, residential district, educational facility, and place of worship.

(d) *Business and identification signs.*

The following business and identification signs are prohibited for adult uses:

(1) neon lights that depict any adult entertainment;

(2) posters, photographs, sketches, painted or laminated signs, or similar materials that are displayed on the exterior of the building or in windows and that depict or illustrate adult entertainment; and

(3) freestanding signs that are on or adjacent to the premises and that identify or advertise the business.

(Ord. 16-581.)

§ 14-301.1. After-hours establishments.

(a) *General considerations.*

For an after-hours establishment, the Zoning Board must consider imposing conditions, as appropriate, concerning:

(1) days and hours of operation;

(2) use of amplification, noise levels, and need for noise proofing;

(3) limits on the size of the establishment or on the size, location, or configuration of any entertainment or dancing venue within the establishment;

(4) number of live entertainers;

(5) whether to place limits on the type of entertainment use;

(6) exterior lighting; and

(7) the establishment and maintenance of:

(i) a traffic and parking management plan; and

(ii) an indoor and outdoor security plan.

(b) *Required findings and conditions*.

The board must find, and require as a condition of approval, that the establishment cannot be entered from a tavern.

(Ord. 17-056.)

§ 14-302. Banquet halls.

A banquet hall may not be used by a third-party entity for banquets, meetings, parties, or other events that were planned, organized, prepared for, executed, or promoted by the third-party entity if the third-party entity has no related business or organizational purpose other than the planning, organization, preparation for, execution, or promotion of banquets, meetings, parties, or other events, and whether or not the third-party entity reserved the establishment**.**

(Ord. 16-581.)

§ 14-303. Boat manufacturing, repair, and sales.

(a) *Required equipment.*

For boat manufacturing, repair, and sales, the site must have equipment capable of repairing, hauling, and launching vessels with a gross weight of 25 tons or more.

(b) *Prohibited activities.*

The following activities are prohibited:

(1) the sale of new boats, other than those assembled or manufactured on site; and

(2) the leasing of dry dock or marina storage for individual boat owners.

(Ord. 16-581.)

§ 14-304. Car washes.

(a) *Lot area*.

(1) The site of a car wash, other than a hand car wash, must be at least 10,000 square feet.

(2) For a hand car wash, there is no minimum lot area.

(b) *Paving.*

The site of the use must be paved to drain away from adjacent properties.

(c) *Lighting*.

Lighting provided for the site must be directed away from adjacent properties.
(Ord. 16-581.)

§ 14-305. Commercial composting facilities.

(a) *"Commercial composting facility" defined.*

"Commercial composting facility" means a facility in the business of collecting, storing, or processing organic materials, bulking agents, or additives for composting.

(b) *Compliance with State laws.*

The facility must work with the Maryland Department of the Environment to ensure its compliance with all State regulations and to obtain all applicable State permits.

(c) *Protection against odors and pests.*

The facility must be operated and maintained in a manner that protects adjacent properties from nuisance odors and the attraction of rodents or other pests.
(Ord. 16-581.)

§ 14-306. Community-based alternative energy systems.

(a) *On participating lots.*

(1) For a community-based alternative energy system, properties may share a solar, wind, or geothermal alternative energy system, including permission to install equipment along all properties.

(2) This community-based renewable energy system is only allowed if agreed to by the owners of each lot, and the agreement is recorded as a "community-based renewable energy easement" on each survey plat, including provisions for all property owners to access all equipment to maintain the system.

(3) The easement must be submitted to the City.

(b) *On lot owned by homeowners' association.*

(1) Alternatively, a community-based alternative energy system may be constructed on a lot managed and owned by a homeowners' association.

(2) A management plan must be submitted to the City.

(c) *Submissions for information only.*

(1) Easements, agreements, and management plans submitted to the City under this section are for informational purposes.

(2) The City does not enforce these easements, agreements, or management plans.

(d) *Applicable standards.*

(1) Community-based alternative energy systems are subject to the standards for the type of individual renewable energy system.

(2) Ground-mounted systems must meet the yard requirements of the applicable district.

(3) Height restrictions and screening requirements must meet the standards of:

(i) § 15-517 {"Alternative energy systems: Solar"} of this Code for solar alternative energy systems; and

(ii) § 15-518 {"Alternative energy systems: Wind"} of this Code for wind alternative energy systems.

(Ord. 16-581.)

§ 14-307. Community-managed open-space gardens and farms.

(a) *Open-space gardens and farms – Plants for human consumption*.

For any community-managed open-space garden or farm use that involves the cultivation of plants for human consumption, measures must be taken to test and, if necessary, remediate the soil in accordance with guidelines adopted by the Department of Planning.

(b) *Open-space gardens and farms – Structures.*

(1) Except as provided in this subsection, permanent structures are prohibited.

(2) Temporary greenhouses are permitted to extend the growing season.

(3) Accessory structures, such as sheds, gazebos, and pergolas, are also permitted**.**

(c) *Open-space farms – Farmstands.*

(1) On a community-managed open-space farm, temporary farmstands for the display and sale of agricultural products grown at the site are permitted.

(2) These farmstands must be removed from the premises or stored inside a structure on the premises during that time of the year when the open space is not open for public use.

(3) Only 1 farmstand is permitted per lot.

(d) *Open-space farms – Composting.*

Composting on-site of a community-managed open-space farm is allowed as an accessory use, subject to the following conditions:

(1) any compost pile must be located at least 3 feet away from any lot line;

(2) composting areas and structures must be maintained in a way that protects adjacent properties from nuisance odors and the attraction of rodents or other pests; and

(3) organic waste material for composting may be accepted from outside sources and either used on site or distributed at no cost, but may not be sold.

(e) *Open-space farms – Livestock and animals.*

The keeping of livestock and animals must adhere to all applicable regulations of the Baltimore City Health Department and the Maryland Department of Agriculture.

(Ord. 16-581; Ord. 17-015.)

§ 14-308. Cultural facilities.

Cultural facilities must be designed so that the location of entrances and exits, exterior lighting, service areas, and parking and loading facilities will minimize traffic congestion, pedestrian hazards, and adverse impacts on adjacent properties.

(Ord. 16-581.)

§ 14-309. Day-care centers: Adult or child.

(a) *In general.*

Adult and child day-care centers must meet all federal, state, and local requirements, including licensing, health, safety, and building code requirements.

(b) *Additional standards.*

In addition, each day-care center must meet the following conditions:

(1) adequate on-site drop-off zones, sidewalks, and exterior lighting must be provided, except that drop-off zones are not required in the C-5 and PC Districts;

(2) the amount of traffic or noise to be generated may not be excessive;

(3) open-space and recreational areas must be provided in accordance with state requirements; and

(4) in all residential districts, day-care center signs may not exceed 12 square feet in aggregate sign area.

(Ord. 16-581; Ord. 17-015.)

§ 14-310. Day-care homes: Adult or child.

(a) *In general.*

Adult and child day-care homes must meet all federal, state, and local requirements, including licensing, health, safety, and building code requirements.

(b) *Additional standards.*

In addition, each day-care home must meet the following conditions:

(1) open-space and recreational areas must be provided in accordance with state requirements;

(2) the day-care home must retain a residential character and may not adversely affect the residential character of the neighborhood.

(3) the operation of the day-care home may not adversely impact surrounding properties; and

(4) in all residential districts, day-care home signs may not exceed 8 square feet in aggregate sign area.

(Ord. 16-581; Ord. 17-015.)

§ 14-311. Drive-through facilities.

(a) *Nature of use.*

A drive-through facility is considered a separate use, rather than accessory to a principal use, and is subject to the following standards.

(b) *Uses eligible for a drive-through facility.*

Only the following uses are eligible for a drive-through facility:

(1) restaurants, including carry-out food shops;

(2) financial institutions; and

(3) retail goods establishments – no alcoholic beverage sales.

(c) *Stacking spaces.*

All drive-through facilities must provide adequate stacking spaces, in accordance with Title 16 {"Off-Street Parking and Loading"} of this Code.

(d) *Service windows, menu boards, and queuing areas.*

Service windows, menu boards, and queuing areas are prohibited along the front facade of any building.

(e) *Effect on traffic.*

(1) All drive-through lanes must be located and designed to ensure that they will not adversely affect the safety and efficiency of traffic circulation on adjacent streets.

(2) A drive-through facility on an interior lot is limited to 2 curb cuts. A drive-through facility on a corner lot is limited to 1 curb cut along each street frontage.

(f) *Exterior lighting.*

No exterior lighting may be used that will produce a glare into or upon the surrounding area or any residential premises.

(g) *Screening.*

All drive-through facilities must be screened from public view in accordance with the requirements of the Baltimore City Landscape Manual.

(h) *Curbs.*

Drive aisles must be separated from landscaped areas by curbs.

(i) *Intercom volume.*

The volume on all intercom -menu displays must be maintained at a level so as not to be audible on adjacent residential properties. The volume on all intercom-menu displays must comply with all local noise regulations.

(j) *Waste control.*

The operator of a drive-through facility must provide:

(1) adequate on-site outdoor waste receptacles; and

(2) daily litter clean-up of the facility.

(Ord. 16-581; Ord. 17-015.)

§ 14-312. Entertainment and recreation facilities: Indoor or outdoor.

Entertainment and recreation facilities must be designed so that the location of entrances and exits, exterior lighting, noise levels, service areas, and parking and loading facilities will minimize traffic congestion, pedestrian hazards, and adverse impacts on adjacent properties.

(Ord. 16-581.)

§ 14-313. Fraternity or sorority houses.

(a) *Location.*

(1) A fraternity or sorority house must be located within 1,000 feet of the Educational Campus District in which is located the college or university with which the fraternity's or sorority's local chapter is affiliated.

(2) (i) No fraternity or sorority house is permitted in any residential district, unless the house:

(A) was established prior to enactment of the Baltimore City Zoning Code of 1971 and has maintained uninterrupted use and occupancy since then; or

(B) since that 1971 enactment, has obtained a use permit as a fraternity or sorority house.

(ii) On or before June 5, 2019, all fraternity or sorority houses must either secure a use permit or terminate the fraternity or sorority use.

(b) *Number of residents.*

The number of individuals residing in a fraternity or sorority house may not exceed that allowed under the City Building, Fire, and Related Codes Article.

(c) *Presumption of structure status.*

For purposes of zoning enforcement, a structure that houses college and university undergraduates may be presumed to be a fraternity or sorority house if:

(1) the house is affiliated with a local chapter of a fraternal or sororal organization; and

(2) that affiliation is acknowledged by the college or university.

(Ord. 16-581; Ord. 17-015.)

§ 14-314. Gas stations.

(a) *Pump limits.*

A gas station that abuts a residential district may not have more than 8 pumps.

(b) *Canopy lighting.*

(1) Gas station canopies must be designed with luminaires recessed under the canopy to minimize light pollution.

(2) Light intensity directly under the canopy may not exceed 10 footcandles at any location. All lighting mounted under the canopy, including auxiliary lighting within signage and panels over the pumps, are included in the 10-footcandle limit.

(c) *Effect on traffic.*

All gas station drive lanes must be designed and located to ensure that they will not adversely affect the safety and efficiency of traffic circulation on adjacent streets.

(d) *Alcoholic beverage sales prohibited.*

The sale of alcoholic beverages is prohibited.

(e) *Automatic car wash.*

A gas station may also include a free-standing self-service car wash with 1 bay.

(f) *Yard requirements.*

(1) Gas stations are not subject to the front yard requirements of the zoning district.

(2) However:

(i) a landscaped front yard of at least 5 feet must be provided; and

(ii) if a gas station adjoins a residential district, buffer yard landscaping is required in accordance with the Baltimore City Landscape Manual.

(g) *Signs.*

Signs must comply with all state and federal regulations for gas station signs.
(Ord. 16-581.)

§ 14-315. General industrial (in MI District).

(a) *When allowed.*

General industrial uses are allowed in the MI District only if the use includes a deepwater component that requires waterside access to and from the property by vessels or barges in maritime trade. This deep water component may include other users whose core business has a maritime-related component.

(b) *Maintenance of infrastructure and channels.*

General industrial uses in the MI District must maintain, regardless of frequency or nature of use:

(1) the working condition of the piers, berths, bulkheads, and other existing maritime infrastructure under their control; and

(2) the water depth and condition of the deepwater channels throughout the associated riparian area.
(Ord. 16-581.)

§ 14-316. Junk or scrap storage and yards.

(a) *Pollution prevention.*

(1) A junk or scrap storage and yard must comply with all federal, state, and local environmental laws, rules, and regulations, including those involving the management of stormwater run-off and the development and maintenance of a pollution prevention plan.

(2) A junk or scrap storage and yard must be located, conformed, drained, and managed so that it will not constitute a source of water pollution.

(3) A pollution prevention plan approved by the City and the Maryland Department of the Environment is required. The plan must comply with all federal, state, and local environmental laws, rules, and regulations.

(b) *Screening.*

A junk or scrap storage and yard must be screened from public view in accordance with the requirements of the Baltimore City Landscape Manual.

(Ord. 16-581; Ord. 17-015.)

§ 14-317. Kennels and animal clinics.

(a) *Scope.*

This section applies to all kennels and animal clinics.

(b) *Quarters and runs to be clean, dry, and sanitary.*

All animal quarters and runs are to be kept in a clean, dry, and sanitary condition.

(c) *Exterior enclosures and runs.*

(1) Exterior enclosures and runs must provide protection against weather extremes.

(2) Floors of runs must be made of impervious material to permit proper cleaning and disinfecting.

(d) *Fencing.*

(1) Exercise areas and runs must be fenced.

(2) This fencing must be:

(i) of a sufficient height to prevent escape; and

(ii) buried during installation to prevent escape by digging beneath the fence posts.

(e) *Noise.*

(1) Noise must be mitigated so as not to create a public nuisance for adjacent properties and must comply with all local noise regulations.

(2) This excludes typical noise from exercise or training while outdoors during daytime hours of operation.

(Ord. 16-581.)

§ 14-318. Landfill: Industrial.

(a) *Compliance with federal, state, and local laws.*

An industrial landfill must:

(1) be a part of the City's Solid Waste Plan;

(2) comply with all applicable federal, state, and local environmental, health, and other laws, rules, and regulations; and

(3) obtain a state reuse disposal permit and all other applicable state and local permits.

(b) *Prohibited waste.*

An industrial landfill may not accept:

(1) residential solid waste;

(2) municipal solid waste; or

(3) rubble or land-clearing debris.

(c) *Layering.*

Materials must be deposited in layers, covered with suitable cover material to a depth and at a frequency sufficient to control disease, vectors, and odors and in a manner that protects the environment.

(d) *Pollution prevention.*

An industrial landfill must be located, conformed, drained, and managed so that it will not constitute a source of water pollution.

(e) *Screening.*

An industrial landfill must be screened from public view in accordance with the requirements of the Baltimore City Landscape Manual.

(Ord. 16-581; Ord. 17-015.)

§ 14-319. Live entertainment or dancing.

(a) *Additional application requirements.*

An application for conditional-use authorization to provide live entertainment or dancing must include:

(1) a description of the type of live entertainment or dancing to be provided;

(2) a floor plan that describes, in sufficient detail:

(i) the establishment generally;

(ii) the live entertainment or dancing venue within the establishment;

(iii) if dancing is to be provided, the location and dimensions of the dance floor; and

(iv) the maximum authorized occupant load, as approved by the Fire Department, for:

(A) all configurations of the establishment, generally; and

(B) the live entertainment or dancing venue, specifically.

(b) *Imposition of conditions.*

In approving a conditional use for live entertainment or dancing, the Board of Municipal and Zoning Appeals may:

(1) limit the types of live entertainment or dancing to which the use is allowed; and

(2) impose conditions, as appropriate, concerning:

(i) days and hours of operation for:

(A) the establishment's operations generally; and

(B) the live entertainment or dancing to be provided;

(ii) use of amplification, noise levels, and need for soundproofing;

(iii) limits on the size of the establishment or on the size, location, or configuration of the live entertainment or dancing venue within the establishment;

(iv) number of live entertainers;

(v) number of seats proposed for outdoor dining;

(vi) exterior lighting;

(vii) whether to limit the use to live entertainment only or dancing only;

(viii) public need and desire for the establishment;

(ix) number and location of other, similar establishments in the area and potential effect of the new use on those establishments;

(x) proximity of residential dwellings, educational facilities, places of worship, or parks or playgrounds to the establishment;

(xi) maximum authorized occupant loads of the establishment and of the live entertainment or dancing venue within the establishment;

(xii) volume and types of vehicular and pedestrian traffic in the area of the establishment; and

(xiii) the establishment and maintenance of:

(A) a traffic management plan;

(B) a parking management plan;

(C) an indoor and outdoor security plan; and

(D) a sanitation plan.

(Ord. 16-581.)

§ 14-320. Lodges and social clubs.

(a) *Effect on traffic, adjacent properties, etc.*

Lodges and social clubs must be designed so that the location of entrances and exits, exterior lighting, service areas, and parking and loading facilities will minimize traffic congestion, pedestrian hazards, and adverse impacts on adjacent properties.

(b) *Meals and drinks.*

Lodges and social clubs are permitted to serve meals or alcoholic beverages on the premises for members and their guests only.

(c) *Office space.*

No more than 50% of the gross floor area may be used as office space for the lodge or social club.

(d) *Sleeping facilities.*

Sleeping facilities are prohibited.
(Ord. 16-581.)

§ 14-321. Lounges.

(a) *In general.*

The establishment, location, construction, maintenance, and operation of a lounge may not be detrimental to or endanger the public health, safety, or welfare.

(b) *Effect on the community*.

The lounge must be designed so that the location of entrances and exits, exterior lighting, noise levels, service areas, and parking and loading facilities will minimize traffic congestion, pedestrian hazards, and adverse impacts on adjacent properties.
(Ord. 17-056.)

§ 14-322. *{Reserved}*

§ 14-323. Marinas; Industrial boat repair facilities.

(a) *Compliance with Maritime Master Plan.*

All marinas and industrial boat repair facilities must comply with the rules and guidelines set forth in the Baltimore Maritime Master Plan, as adopted by the Planning Commission and amended from time to time.

(b) *No impeding access to water.*

A marina or industrial boat repair facility may not unduly impede access to open water by other marinas, industrial boat repair facilities, commercial operations, or boat launches.

(c) *Compliance with federal, state, and local requirements.*

The marina or industrial boat repair facility must meet all federal, state, and local requirements for the construction, operation, and maintenance of a marina or a industrial boat repair facility.
(Ord. 16-581.)

§ 14-324. Materials recovery facilities.

(a) *Compliance with State and local laws*.

A materials recovery facility must:

(1) comply with all applicable state and local laws, rules, and regulations; and

(2) obtain all applicable state and local permits.

(b) *Operations to be enclosed or screened.*

(1) All loading and unloading must be performed either within an enclosed structure or otherwise screened from public view in accordance with the requirements of the Baltimore City Landscape Manual.

(2) All other operations must be performed within an enclosed building.

(c) *No on-site purchases.*

The operator of a materials recovery facility may not purchase materials on-site from the public.
(Ord. 16-581; Ord. 17-015.)

§ 14-325. Motor vehicle or recreational vehicle dealerships or rental establishments.

(a) *Lot size.*

Motor vehicle or recreational vehicle dealerships or rental establishments must have a lot size of at least 20,000 square feet, except in a PC Subdistrict.

(b) *Service area.*

Any service and repair facilities must also comply with the standards §14-326 {"Motor vehicle service and repair"} of this subtitle.
(Ord. 16-581; Ord. 17-015.)

§ 14-326. Motor vehicle service and repair: Major or minor.

(a) *Lot size.*

(1) Major motor vehicle service and repair shops must have a lot size of at least 20,000 square feet, except in a PC Subdistrict.

(2) Minor motor vehicle service and repair shops must have a lot size of at least 10,000 square feet, except in a PC Subdistrict.

(b) *Outdoor storage limitations.*

Motor vehicle service and repair shops may not store the same vehicles outdoors on the site for longer than 10 days.

(c) *Effect on traffic.*

All curb cuts must be located and designed to ensure that they will not adversely affect the safety and efficiency of traffic circulation on adjacent streets.

(d) *Operations to be enclosed or screened.*

(1) All repair operations must be fully enclosed.

(2) Wrecked or junked vehicles must be kept within an enclosed structure or otherwise screened from public view in accordance with the requirements of the Baltimore City Landscape Manual.

(3) Only motor vehicles may be stored outdoors. Their storage must comply with the requirements of § 15-510 {"Outdoor storage"} of this Code.

(Ord. 16-581; Ord. 17-015.)

§ 14-327. Multi-family dwellings – Accessory non-residential uses.

(a) *Accessory non-residential uses allowed.*

A multi-family dwelling containing 50 or more dwelling units in the R-8, R-9, R-10, and OR-2 Districts may contain the following non-residential uses:

(1) Offices.

(2) Personal service establishments.

(3) Retail goods establishments – no alcoholic beverage sales.

(4) Restaurants.

(b) *Uses limited to building interior.*

These uses must be conducted entirely inside the building.

(c) *Aggregate area of uses.*

The aggregate area of these uses may not exceed the following:

(1) in the R-8 and R-9 Districts, 5% of the gross floor area of the building; and

(2) in the R-10 and OR-2 Districts, the greater of:

(i) 10% of the gross floor area of the building; or

(ii) if all these uses are located exclusively on the ground floor of the building, the floor area of the entire ground floor.

(d) *Wall sign.*

(1) Only 1 wall sign on the exterior of the building is allowed, subject to the following regulations.

(2) Internally illuminated wall signs are prohibited. Indirect illumination is allowed.

(3) The sign is limited to the name or description of the use.

(4) In the R-8 and R-9 Districts, the wall sign:

(i) may not exceed 3 square feet of sign area;

(ii) may not exceed 12 feet in height, as measured from grade to the uppermost point of the sign; and

(iii) may not project more than 8 inches from the face of the building.

(5) In the R-10 and OR-2 Districts, the wall sign:

(i) may not exceed 1 square foot of sign area per linear foot of building frontage;

(ii) may not be mounted higher then the second-floor line; and

(iii) may not project more than 12 inches from the face of the building.

(e) *Window signs.*

Window signs are allowed in accordance with the provisions of Title 17 {"Signs"} of this Code. *(Ord. 16-581; Ord. 17-015.)*

§ 14-328. Neighborhood commercial establishments.

(a) *In general.*

Neighborhood commercial establishment uses are limited to the reuse of existing buildings that were originally constructed and used for non-residential uses in what are now Residential or Office-Residential Zoning Districts. Because these uses are for existing buildings, they are not subject to the minimum lot area required for non-residential uses in Residential or Office-Residential Zoning Districts.

(b) *Non-residential uses allowed.*

A neighborhood commercial establishment may contain the following non-residential uses:

(1) Art galleries – no live entertainment or dancing.

(2) Arts studios.

(3) Day care centers: adult or child.

(4) Offices.

(5) Personal services establishments.

(6) Restaurants – no live entertainment or dancing.

(7) Retail goods establishments – no alcoholic beverage sales.

(c) *Pedestrian orientation.*

The development and the proposed use must be pedestrian-oriented and not oriented to the automobile.

(d) *Principal entrance.*

The principal entrance must be a direct entry from the primary adjoining street.

(e) *Off-street parking.*

No off-street parking is required for uses under 2,500 square feet in gross floor area.

(f) *Drive-through facilities prohibited.*

Drive-through facilities are prohibited.

(g) *Uses limited to building interior.*

(1) All business, servicing, processing, and storage uses must be located within the building.

(2) Outside storage or display is prohibited.

(h) *Signs.*

All signs are restricted to the requirements applicable to the C-1 District.
(Ord. 16-581.)

§ 14-329. Outdoor dining.

(a) *Nature of use.*

Outdoor dining is considered an accessory use to a principal use.

(b) *Pedestrian and parking access.*

(1) Outdoor dining may not interfere with the pedestrian access or parking.

(2) All outdoor dining areas must maintain a 5-foot sidewalk clearance at all times.

(c) *Minor privilege permit.*

Any outdoor dining located in the public right-of-way requires a minor privilege permit.

(d) *Required yard.*

Outdoor dining may not be located in any required yard that adjoins a residential district, unless an alley is located between the use and the residential district.

(e) *Compactness.*

An outdoor dining area for an establishment must be as compact as possible by locating the outdoor dining area in a single portion of an establishment's frontage.

(Ord. 16-581.)

§ 14-330. Outdoor storage yards and contractor storage yards.

(a) *"Outdoor storage area" defined.*

In this section, "outdoor storage area" means any:

(1) outdoor storage yard; or

(2) contractor storage yard.

(b) *Screening requirements.*

All outdoor storage areas must be screened in accordance with § 15-510 {"Outdoor storage"} of this Code.

(c) *Location.*

Whenever possible, the storage area must be located to the rear of the lot.

(d) *Surfacing.*

(1) Outdoor storage areas must be surfaced and graded to drain all surface water.

(2) Outdoor storage areas may be surfaced with partially permeable materials, if adequate drainage and erosion and dust control are provided.

(e) *Lighting.*

(1) Any lighting used to illuminate an outdoor storage area must be directed and shielded as to not illuminate any adjacent lots.

(2) All exterior lighting must comply with the requirements of § 15-505 {"Exterior Lighting"} of this Code.

(Ord. 16-581.)

§ 14-331. Parking garages (principal use) and parking lots.

(a) *Parking garages (principal use).*

(1) Parking garages (principal use) in the C-1, C-1-E, C-1-VC, C-2, C-3, C-5, and TOD Districts must include active ground-floor uses, whether residential or non-residential uses, along at least 50% of the ground floor when adjoining a street, other than an alley.

(2) In all other districts, if a parking garage does not include active ground floor uses along at least 50% of the ground floor, the ground floor must be screened from public view in accordance with the requirements of the Baltimore City Landscape Manual.

(b) *Parking lots.*

(1) A parking lot may be used solely for the parking of motor vehicles and may not be used as an off-street loading area.

(2) No motor vehicle repair or service of any kind may be conducted in any parking lot.

(3) No signs of any kind, other than identification signs and signs designating entrances, exits, and conditions of use, may be maintained on any off-street parking lot.

(4) No buildings other than those for shelter of attendants may be erected in a parking lot. The allowable shelters may not exceed 10 feet in height or 200 square feet in area.

(5) The parking lot must be screened from public view in accordance with the requirements of the Baltimore City Landscape Manual.

(6) The parking lot must be kept free from refuse and debris.

(Ord. 16-581; Ord. 17-015.)

§ 14-332. Places of worship.

Places of worship must be designed so that the location of entrances and exits, exterior lighting, service areas, and parking and loading facilities will minimize traffic congestion, pedestrian hazards, and adverse impacts on adjacent properties.

(Ord. 16-581.)

§ 14-333. Recyclable materials recovery facilities.

(a) *Compliance with state and local laws.*

A recyclable materials recovery facility must:

(1) comply with all applicable state and local laws, rules, and regulations; and

(2) obtain all applicable state and local permits.

(b) *Operations to be enclosed or screened.*

(1) All loading and unloading must be performed either within an enclosed building or within an area screened from public view in accordance with the requirements of the Baltimore City Landscape Manual.

(2) All other operations must be enclosed within an enclosed building.

(Ord. 16-581; Ord. 17-015.)

§ 14-334. Residential-care facilities.

(a) *Single-family dwelling.*

A residential-care facility may locate where single-family dwellings are allowed under this Code as permitted or conditional uses, if the facility:

(1) is located in a single-family dwelling (whether detached, semi-detached, or attached);

(2) complies with § 1-305(u) {"Definitions: Dwelling unit"} and § 1-306(g) {"Definitions: Family"} of this Code; and

(3) meets the general requirements, the bulk and yard regulations, and all other requirements of this Code applicable to dwellings in the zoning district within which the facility is located.

(b) *Multi-family dwelling.*

A residential-care facility may locate where multi-family dwellings are allowed as permitted or conditional uses under this Code , if the facility:

(1) complies with § 1-305(p) {"Definitions: Dwelling: Multi-family"}, § 1-305(u) {"Definitions: Dwelling unit"}, and § 1-306(g) {"Definitions: Family"} of this Code; and

(2) meets the general requirements, the bulk and yard regulations, and all other requirements of this Code applicable to dwellings in the zoning district within which the facility is located.

(Ord. 16-581; Ord. 17-015.)

§ 14-335. Resource recovery facilities.

(a) *Compliance with state and local laws.*

A resource recovery facility must:

(1) comply with all applicable state and local laws, rules, and regulations, including state restrictions on location; and

(2) obtain all applicable state and local permits.

(b) *Environmental and health regulations.*

The facility must comply with all federal, state, and local environmental and health laws, rules, and regulations.

(c) *Storage*.

Material must be stored indoors or in appropriate waste containers.

(Ord. 16-581.)

§ 14-335.1. Retail: Big box establishments.

Before approving a conditional use application for a proposed Retail: Big box establishment, a finding must be made that the proposed use will not have an undue adverse economic impact on the community. This finding must be based on data provided by an economic and fiscal impact study conducted by a qualified analyst selected by the City and must be paid by a fee assessed to the applicant.

(Ord. 16-581.)

§ 14-336. Retail goods establishments – With alcoholic beverage sales.

(a) *License required.*

A retail goods establishment with alcoholic beverage sales must have a Class A or Class A-2 License from the Baltimore City Board of Liquor License Commissioners.

(b) *Health, safety, and welfare.*

The establishment may not be detrimental to or endanger the public health, safety, and welfare.

(c) *Distance from others.*

(1) Except as otherwise provided in this subsection, a retail goods establishment with alcoholic beverage sales must be located at least 300 feet from any other existing retail goods establishment with alcoholic beverage sales.

(2) This spacing requirement does not apply in the C-5, C-1-E, and PC Districts.

(3) The Board of Municipal and Zoning Appeals may waive this spacing standard during the conditional use process if the applicant can show that there will be no negative impact to public health, safety, and welfare.

(Ord. 16-581.)

§ 14-337. Taverns.

(a) *License required.*

A tavern must have the appropriate license from the Baltimore City Board of Liquor License Commissioners.

(b) *Sales for off-premises consumption.*

Taverns may sell alcoholic beverages for off-premises consumption only if:

(1) annually, the average daily receipts from the sale of alcoholic beverages for on-premises consumption exceeds 50% of the establishment's total average daily receipts, not including sales of novelty items, income from vending machines, cover charges, or other receipts not derived from the sale of food or beverages; and

(2) more than 50% of the establishment's public floor space is devoted to on-premises consumption.

(c) *Records.*

Taverns must keep accurate records of all sales of alcoholic beverages so that a determination can be made of what proportion of those sales are in sealed packages or containers for off-premise consumption. These records must be maintained and made available for inspection to confirm compliance.

(Ord. 16-581.)

§ 14-338. Telecommunications facilities.

(a) *Definitions.*

(1) *In general.*

In this section, the following terms have the meanings indicated.

(2) *Base station.*

(i) *In general.*

"Base station" means the transmission equipment and non-tower supporting structure at a fixed location that enables wireless communications services between user equipment and a communications network.

(ii) *Exclusions.*

"Base station" does not include a satellite dish antenna, as defined in § 1-313(d) {"Satellite dish antenna"} of this Code.

(3) *Collocate.*

"Collocate" means to mount or install transmission equipment on telecommunication facilities for the purpose of transmitting or receiving radio frequency signals for communications purposes.

(4) *Distributed antenna system; DAS.*

"Distributed antenna system" or "DAS" means a network of multiple, spatially separate antenna nodes connected, for the purpose of providing wireless communication services within a geographic area.

(5) *Eligible facilities request.*

"Eligible facilities request" means any request for modification of an existing tower or base station that:

(i) involves:

(A) the collocation of new transmission equipment;

(B) the removal of transmission equipment; or

(C) the replacement of transmission equipment; and

(ii) does not:

(A) substantially change physical dimensions; or

(B) include the replacement of a tower.

(6) *Node*.

"Node" means a component of a DAS or small cell installation that:

(i) includes one or more radio frequency transmitters or antennae; and

(ii) is connected by a high capacity transport medium (such as a fiber optic cable) to a common source with other nodes.

(7) *Small cell installation*.

"Small cell installation" means a wireless communication technology installation similar to a DAS, but normally including a single node.

(8) *Substantially change ... physical dimensions*.

"Substantially change ... physical dimensions", when used with reference to a tower or base station, means:

(i) for a tower:

(A) an increase in the tower's height by more than 10% or by the height of one additional antenna array with separation from the nearest existing antenna not to exceed 20 feet, whichever is greater; or

(B) the creation of an appurtenance that protrudes from the edge of the tower more than 20 feet or more than the width of the tower structure at the level of the appurtenance, whichever is greater;

(ii) for a base station:

(A) an increase in the base station's height by more than 10% or 10 feet, whichever is greater; or

(B) the creation of an appurtenance that protrudes from the edge of the base station by more than 6 feet;

(iii) an installation of more than the standard number of new equipment cabinets for the technology involved or, in any event, more than 4 cabinets;

(iv) a modification that entails an excavation or deployment outside the current site of the tower or base station;

(v) a modification that would defeat the existing concealment elements of the tower or base station; and

(vi) a modification that does not comply with conditions associated with the prior approval of construction or modification of the tower or base station, unless the non-compliance is due to an increase in height, increase in width, additional cabinet installation, or new excavation that does not exceed the corresponding "substantial change" thresholds identified above.

(9) *Telecommunications facility*.

"Telecommunications facility" means any structure that falls within the definition of "base station" or "tower".

(10) *Tower*.

(i) *In general.*

"Tower" means any structure built for the sole or primary purpose of supporting a base station.

(ii) *Exclusions*.

"Tower" does not include a satellite dish antenna, as defined in § 1-313(d) {"Satellite dish antenna"} of this Code.

(11) *Transmission equipment*.

(i) *In general.*

"Transmission equipment" means any equipment that facilitates transmission for a wireless communication service.

(ii) *Inclusions*.

"Transmission equipment" includes radio transceivers, antennas, and other relevant equipment associated with and necessary to their operation, including coaxial or fiber-optic cable, and regular and backup power supply.

(iii) *Exclusions*.

"Transmission equipment" does not include a satellite dish antenna, as defined in § 1-313(d) {"Satellite dish antenna"} of this Code.

(12) *Wireless communications service*.

(i) *In general*.

"Wireless communications service" means a radiocommunication service licensed pursuant to Federal Communications Commission requirements for frequency bands in the 2305-2320 and 2345-2360 MHZ spectrum range.

(ii) *Illustrations*.

The most common use of this spectrum is mobile voice and data services, including cell phone, text messaging, and Internet.

(b) *Exclusions from section*.

This section does not apply to towers or base stations located in a public right-of-way.

(c) *Purpose of standards*.

The following standards for telecommunications facilities are intended to:

(1) ensure public health, safety, and welfare;

(2) ensure access to reliable wireless communications services throughout the City;

(3) encourage the location of antennas and towers on City-owned property;

(4) encourage the use of existing telecommunications facilities for wireless communications services; and

(5) encourage the location of towers, to the extent possible, in areas where the adverse impact on the City will be minimal and, preferably, in non-residential districts.

(d) *Approval and application requirements*.

(1) *Use approvals*.

A telecommunications facility is, in all districts, a conditional use requiring approval by the Board of Municipal and Zoning Appeals, except where, as provided in subsection (k) {"Stealth design"} or subsection (n) {"Modifications"} of this section, it is a permitted use subject to site plan review.

(2) *Application requirements*.

In addition to the general requirements for conditional-use applications, site plan review submissions, eligible facilities requests, or other documentation, all applications to erect, construct, or modify any part of a telecommunications facility must include the following items:

(i) a site plan showing:

(A) the location, size, screening, and design of all structures, including fences;

(B) the location and size of all outdoor equipment;

(C) elevations showing antenna height;

(D) a landscape plan; and

(E) if the site plan is for a new tower, indication of the fall zone (shaded circle);

(ii) a maintenance plan, and any applicable maintenance agreement, designed to ensure long-term, continuous maintenance to a reasonably prudent standard, including maintenance of landscaping, keeping the area free from debris and litter, and immediate removal of any graffiti;

(iii) a description of what is proposed, demonstrating the need for the telecommunications facility to be located where proposed;

(iv) the reason or purpose for the placement, construction, or modification, with specific reference to the provider's coverage, capacity, and quality needs, goals, and objectives;

(v) the service area of the proposed telecommunications facility;

(vi) if the proposal is for a new tower, a map showing existing telecommunications facilities within the City and within areas surrounding the borders of the City, together with a justification for why locating on those existing facilities is not feasible and the new tower needed where proposed;

(vii) certification by a professional engineer of the manner in which the proposed structure will fall, which certification may be used, along with other criteria such as applicable regulations for the district in question, in determining if additional setback should be required for the structure and other facilities; and

(viii) a visual simulation or rendering of the proposed telecommunications facility that illustrates the relationship between the height and the visual appearance of the telecommunications facility. The Zoning Administrator may require that the visual simulation be provided from 2 different perspectives and accurately depict the scale of the proposed telecommunications facility in the context of the surrounding area.

(e) *Setbacks.*

(1) Telecommunications facilities must be set back from all lot lines in accordance with the minimum setback requirements applicable to the district in question.

(2) DAS and small cell installation sites are not subject to setback requirements.

(f) *Height.*

The maximum height of a tower is the minimum needed to function satisfactorily with telecommunications facilities for at least 2 wireless communications service providers. The conditional-use application for approval of a tower must demonstrate the height needed for the tower.

(g) *Lighting and marking.*

Telecommunications facilities may not be lit or marked unless required by the Federal Communications Commission, by the Federal Aviation Administration, or for the specific purpose of security, maintenance, or repair.

(h) *Landscaping.*

Telecommunications facilities must comply with the landscaping regulations of the Baltimore City Landscape Manual.

(i) *Additional standards for facilities.*

(1) A base station may house only equipment and supplies for the direct operation of the telecommunications facility. Equipment and supplies not used in direct support of the operation may not be stored on the site.

(2) The facility may not be staffed.

(3) Signs for the telecommunications facility are limited to ownership and contact information, FCC antenna registration number (if required), and any other information required by government regulation.

(4) Commercial advertising is strictly prohibited.

(j) *Additional standards for towers.*

(1) A tower may be freestanding or supported and may be of either lattice or monopole construction.

(2) The ability for other wireless communications service providers to collocate on a tower is required. Towers must be designed to accommodate other wireless communications service providers. The area surrounding a tower must be of a sufficient size to accommodate the base stations of at least 2 wireless communications service providers.

(3) Unless otherwise required by the Federal Communications Commission, the Federal Aviation Administration, or the City, towers must have a galvanized silver or gray finish.

(k) *Stealth design.*

(1) Stealth designs for base stations are encouraged and are permitted uses in all commercial, industrial, and special purpose districts, subject to site plan review and the requirements of this section.

(2) An application for site plan review must include all information required by this section.

(3) To qualify as a permitted stealth design:

(i) the base station must be within an enclosed structure or otherwise screened from public view in accordance with the requirements of the Baltimore City Landscape Manual;

(ii) its antennae must be mounted at least 40 feet above grade, except for small cell installations, which must be mounted at least 25 feet above grade or a minimum of 15 feet by conditional use, as measured from grade to the base of the antenna;

(iii) the base station must be located on or in a structure already permitted within the zoning district, such as water towers, clock towers, streetlights, penthouses, parapet walls, and steeples, and designed to blend into the structure; and

(iv) the base station may not increase the overall height of the structure on which it is mounted.

(4) Base stations that collocate on existing towers are considered stealth design.

(l) *Abandonment.*

(1) Any telecommunications facility that is not operated for 180 consecutive days is considered abandoned.

(2) The owner must remove the telecommunications facility and all aboveground equipment and related debris within 180 days of its abandonment.

(m) *Nonconformities.*

(1) Ordinary maintenance may be performed on nonconforming telecommunications facilities. However, if a proposed alteration intensifies a nonconforming characteristic of the telecommunications facility, a variance is required.

(2) Collocation of a base station on an existing nonconforming tower is allowed as a conditional use requiring approval by the Board of Municipal and Zoning Appeals, as long as the addition of the base station does not intensify the nonconformity.

(n) *Modifications*.

(1) Modifications of an existing tower or base station that does not substantially change the physical dimensions of the tower or base station are permitted if supported by an eligible facilities request.

(2) An applicant submitting an eligible facilities request must show that the modification does not substantially change the physical dimensions of the tower or base station.

(3) Within 60 days of filing an eligible facilities request, the request must be reviewed and approved if the modification qualifies under this subsection,

(4) Approval of an eligible facilities request:

(i) is subject to a site plan review; and

(ii) may be subject to conditions imposed by the Zoning Administrator, as long as those conditions do not conflict with the provisions of this section.

(o) *Certifications.*

When the installation of a telecommunications facility is completed, and every 5th year thereafter, a professional engineer must certify that the facility meets all applicable Building Code and safety requirements.

(Ord. 16-581; Ord. 17-015.)

§ 14-339. Urban agriculture.

(a) *Management plan for certain activities.*

Urban agriculture uses that involve any of the following activities must prepare a management plan, subject to approval by the Director of Planning, that addresses how the activities will be managed to mitigate impacts on surrounding land uses and natural systems:

(1) Animal husbandry, including chicken coops, apiaries and aquaculture. The keeping of livestock must adhere to all Baltimore City Health Department and Maryland Department of Agriculture regulations.

(2) Processing of food produced on site.

(3) Spreading of manure, sludge, or other nutrient-rich fertilizers.

(4) Spraying of agricultural chemicals, including fertilizers, fungicides, and pesticides.

(5) Use of heavy equipment such as tractors.

(b) *Greenhouses, etc.*

(1) Greenhouses (permanent or temporary) used to extend the growing season are permitted.

(2) There is no limit on the number or square footage on these structures.

(c) *Plants for human consumption.*

For any urban agriculture use that involves the cultivation of plants for human consumption, measures must be taken to test and, if necessary, remediate the soil in accordance with guidelines adopted by the Department of Planning.

(d) *Permanent accessory structures.*

(1) Permanent accessory structures are limited to:

(i) tool sheds;

(ii) shade pavilions;

(iii) barns;

(iv) toilet facilities;

(v) planting preparation houses; and

(vi) post-harvest processing facilities.

(2) All structures must be set back at least 5 feet from any lot line.

(3) No structure may exceed 25 feet in height, except for structures designed to capture wind energy.

(e) *Combined area of accessory structures.*

(1) The combined area of all structures is limited to 25% of the lot area.

(2) For multiple adjoining lots that are under common ownership and used as community-managed open space, the limit for the combined area of structures is applied over the entire site rather than each individual lot. The limit for the combined area of structures for the individual lots may not exceed that of the underlying zoning district.

(f) *Farmstands.*

(1) Farmstands for the display and sale of agricultural products are permitted.

(2) Farmstands must be removed from the premises or stored inside a structure on the premises during that time of the year when the facility is not open for public use.

(g) *Composting.*

Composting on-site is allowed as an accessory use, subject to the following conditions:

(1) any compost pile must be located at least 3 feet away from any lot line;

(2) composting areas and structures must be maintained in a way that protects adjacent properties from nuisance odors and the attraction of rodents or other pests; and

(3) organic waste material for composting may be accepted from outside sources and either used on site or distributed at no cost, but may not be sold.

(Ord. 16-581; Ord. 17-015.)

§ 14-340. Utilities and electric substations.

(a) *Effect on traffic, adjacent properties, etc.*

Utilities and electric substations must be designed so that the location of entrances and exits, exterior lighting, service areas, and parking and loading facilities will minimize traffic congestion, pedestrian hazards, and adverse impacts on adjacent properties.

(b) *Aboveground structures.*

Except as otherwise provided in subsection (c) of this section, electric substations and any aboveground utility structures, such as pedestals for cable wire access or other access points for underground infrastructure (communications wiring, fiber optic, etc.):

(1) may not encroach into a required front yard; and

(2) must be screened from any public right-of-way.

(c) *Exemptions from setback and screening requirements.*

The following are exempt from the setback and screening requirements of subsection (b) of this section:

(1) an above-ground, fully-enclosed transformer, switchgear, regulator, meter, or capacitor that is located in an Industrial Zoning District; and

(2) an above-ground, fully-enclosed transformer, switchgear, regulator, meter, or capacitor that:

(i) is located in a Residential, Office-Residential, Commercial, or TOD Zoning District; and

(ii) does not exceed 7 feet in width, 7 feet in length, or 6 feet in height.

(d) *Modifications to electric substations.*

On a property where an electric substation has been approved as a conditional use, a modification of the electric substation is allowed without amendment of the conditional use, as long as:

(1) the modification conforms to the bulk and yard regulations of the underlying zoning district;

(2) the modification either:

(i) is located solely within the existing perimeter fence or wall; or

(ii) covers an area beyond the existing perimeter fence or wall that is not more than 10% of the area within the existing perimeter fence or wall;

(3) the modification is located solely on the property governed by the conditional use; and

(4) the electric substation, as so modified, complies with all conditions of the existing conditional use approval other than a condition that restricts the electric substation to the equipment configuration allowed under the existing conditional use approval.

(Ord. 16-581; Ord. 17-015.)

SUBTITLE 4
TEMPORARY-USE STANDARDS

§ 14-401. Permits.

(a) *Applications.*

Any person that desires a temporary-use permit, as required by this Code, must file with the Zoning Administrator a written application, in the form that the Zoning Administrator requires.

(b) *Authorization.*

(1) The Zoning Administrator may grant temporary-use permits for temporary uses, whether the proposed use is specifically listed in this subtitle or, except for a use that involves alcoholic beverage sales, not specifically listed in this subtitle, as long as the Zoning Administrator determines that the proposed use complies with all applicable requirements of this subtitle and this Code.

(2) Unless otherwise limited, temporary uses may be allowed in any zoning district as long as that use is consistent with the purpose and intent of this Code and the zoning district in which it is located.

(c) *Conditions, restrictions, etc.*

(1) No temporary use is allowed in any district if it would have a significant negative impact on any adjacent property or on the area as a whole.

(2) Unless expressly provided in this subtitle, every temporary use or structure must comply with the bulk and yard regulations applicable to the district in which it is located.

(3) As part of the temporary-use permit approval, the Zoning Administrator may impose other conditions, restrictions, or limitations as necessary to achieve the purposes of this Code and to protect the public health, safety, and welfare.

(d) *Enforcement.*

(1) Whenever the Zoning Administrator learns of a violation of a condition, restriction, or limitation imposed on a temporary use, the Zoning Administrator must attempt to resolve it informally and promptly.

(2) If unable to resolve the violation, the Zoning Administrator must issue notice of proposed revocation.

(3) All notices must be served by 1 of the methods specified in § 19-207 {"Violation notice: Service"} of this Code.

(4) The notice of the proposed revocation must be sent to:

(i) the owners of record of the property, as shown on the tax records of Baltimore City;

(ii) the persons to whom the temporary-use permit was granted or the current operator; and

(iii) the Director of Planning.

(5) The notice must specify the nature of the violation and warn the recipient that, unless the violation is corrected within the time specified in the notice, the Zoning Administrator will either:

(i) revoke the permit;

(ii) suspend the permit subject to completion of corrective action or other condition; or

(iii) affirm the permit subject to a schedule for corrective action, with provision for automatic termination if the schedule is not met.

(Ord. 16-581; Ord. 17-015.)

§ 14-402. General provisions.

(a) *Threat to health, safety, or welfare*

No temporary use is permitted that causes or threatens to cause an on-site or off-site threat to the public health, safety, or welfare.

(b) *Safety regulations.*

(1) Every temporary use must be operated in accordance with the restrictions and conditions that the Fire Department requires.

(2) If required by the City, the operator of the temporary use must employ appropriate security personnel.

(c) *Traffic considerations.*

(1) No temporary use is permitted if the additional vehicular traffic reasonably expected to be generated by the use would have undue detrimental effects on surrounding streets and uses.

(2) No temporary use may block fire lanes.

(d) *Parking spaces.*

(1) No temporary use may be authorized that would unreasonably reduce the amount of parking spaces available for use in connection with permanent uses located on the lot in question.

(2) The Building Official may make an assessment of the total number of parking spaces that will be reasonably required in connection with a proposed temporary use, based on the particular use, its intensity, and the availability of other parking facilities in the area. The Building Official may approve the temporary use only if that number of parking spaces are provided.

(e) *Conflict with previously authorized use.*

No temporary use is permitted if it conflicts with another previously authorized temporary use. *(Ord. 16-581.)*

§§ 14-403 to 14-405. *{Reserved}*

§ 14-406. Permitted temporary uses – Carnivals or circuses.

(a) *Where allowed.*

Carnivals and circuses are allowed in any district.

(b) *Evaluation.*

Carnivals and circuses are evaluated based on:

(1) the adequacy of the parcel size, parking provisions, and traffic access; and

(2) the absence of undue adverse impact, including noise, on other properties.

(c) *Yard and height restrictions.*

Carnivals and circuses need not comply with the yard requirements and the maximum height requirements of this Code.

(d) *Requirements.*

The party responsible for the operation of the carnival or circus must:

(1) submit, in advance of the event, a site layout displaying adequate ingress and egress routes for emergency vehicles and no dead-end aisles;

(2) comply with all applicable local regulations;

(3) provide and properly service refuse containers in the number and locations required by the City;

(4) provide for a thorough clean-up of the site at the completion of the event;

(5) provide proof that all amusement devices have been government inspected; and

(6) on written notice from the City, immediately stop the use of any amusement device or structure found by the City to pose a threat to the public safety.

(Ord. 16-581.)

§ 14-407. Permitted temporary uses – Seasonal or holiday sales lots.

(a) *Where allowed.*

Seasonal or holiday sales lots are allowed in any district.

(b) *Evaluation.*

Seasonal or holiday sales lots, such as Christmas tree sales and pumpkin patches, are evaluated based on:

(1) the adequacy of the parcel size, parking provisions, and traffic access; and

(2) the absence of undue adverse impact on other properties.

(c) *Durational limits.*

Seasonal or holiday sales lots are limited to a period of not more than 45 days.
(Ord. 16-581.)

§ 14-408. Permitted temporary uses – Farmers' markets.

(a) *"Farmers' market"defined*.

"Farmers' market" means a market in a fixed location at which 3 or more vendors offer for sale to the public:

(1) fresh fruits, vegetables, juices, flowers, plants, herbs, or spices that have been produced or grown by the vendor or consigned to the vendor by their producer or grower;

(2) baked goods, meats, dairy goods, or prepared foods that have been made by the vendor or consigned to the vendor by their maker; or

(3) arts and crafts that have been made by the vendor or consigned to the vendor by their maker.

(b) *Where allowed.*

Farmers' markets are allowed in any zoning district on a lot or contiguous lots at least 3,500 square feet.

(c) *Application*

The application for a temporary-use permit must be submitted by the market's manager.

(d) *New farmers' market.*

For an initial application, the market's manager must also submit a map that shows:

(1) the location and layout of the site; and

(2) all parking areas, including proposed ingress and egress.

(e) *Arts and crafts limitation.*

Sales of arts and crafts may not occupy more the 25% of the overall sales area of the market. *(Ord. 16-581.)*

§ 14-409. Permitted temporary uses – House, apartment, garage, and yard sales.

(a) *Where allowed.*

House, apartment, garage, and yard sales are allowed in any district, but only when limited to personal possessions of, or arts and crafts made by, the owner or occupant of the dwelling unit where the sale is being conducted.

(b) *Permit not required.*

No temporary-use permit is required.

(c) *Durational limits.*

(1) These sales are limited to a period of not more than 3 consecutive days.

(2) No more than 3 sales may be conducted from the same residence in any 12-month period. *(Ord. 16-581.)*

§ 14-410. Permitted temporary uses – Shows and sales.

(a) *"Shows and sales" defined*.

In this section, "shows and sales" means any of the following events, whether indoors or outdoors:

(1) arts and crafts shows and sales;

(2) flea markets;

(3) holiday shows and sales; and

(4) plant shows and sales.

(b) *Where allowed.*

Shows and sales, as described in subsection (a) of this section, are allowed in any district.

(c) *Evaluation.*

These shows and sales are evaluated based on:

(1) the adequacy of the parcel size, parking provisions, and traffic access; and

(2) the absence of undue adverse impact on other properties.

(d) *Durational limits.*

(1) In residential districts:

(i) these shows and sales are limited to a period of not more than 3 consecutive days; and

(ii) no more than 3 shows or sales are permitted at the same location in any 12-month period.

(2) In all other districts:

(i) these shows and sales are limited to a period of not more than 3 consecutive days; and

(ii) no more than 4 shows or sales are permitted at the same location in any 12-month period.

(Ord. 16-581.)

§ 14-411. Permitted temporary uses – Sidewalk sales.

(a) *Where allowed.*

Sidewalk sales are permitted in the commercial districts only.

(b) *Must be incidental to permanent on-site use.*

(1) Sidewalk sales must be in conjunction with and clearly incidental to an existing permanent on-site use.

(2) Sidewalk sales are permitted to display and sell only merchandise that is found in stores participating in the sidewalk sale.

(c) *No interference with pedestrian traffic.*

Sidewalk sale may not interfere with pedestrian traffic or violate standards of accessibility required by the ADA or other accessibility codes.

(d) *Minor privilege permit.*

A minor privilege permit is required for any sidewalk sale that takes place within the public right-of-way.

(e) *Durational limits.*

(1) Sidewalk sales are limited to a period of not more than 5 consecutive days.

(2) No more than 2 sales are permitted at the same location in any 12-month period.
(Ord. 16-581.)

§ 14-412. Permitted temporary uses – Outdoor entertainment.

(a) *Where allowed.*

Temporary outdoor entertainment events are allowed in non-residential districts.

(b) *Evaluation.*

Temporary outdoor entertainment events are evaluated based on:

(1) the adequacy of the parcel size, parking provisions, and traffic access; and

(2) the absence of undue adverse impact, including noise, on other properties.

(c) *Yard restrictions.*

Temporary outdoor entertainment events need not comply with the yard requirements of this Code.
(Ord. 16-581.)

§ 14-413. Permitted temporary uses – Batching plants.

(a) *Where allowed.*

Temporary batching plants (asphalt or concrete) are allowed in any district in connection with construction activities.

(b) *Setback.*

Temporary batching plants must be set back at least 50 feet from any property developed for other than industrial uses.

(c) *Durational limits.*

Temporary batching plants are limited the duration of construction or 1 year, whichever is sooner.
(Ord. 16-581.)

§ 14-414. Permitted temporary uses – Contractor trailers; Real estate model units.

(a) *Definitions.*

(1) In this section, the following terms have the meanings indicated.

(2) "Contractor trailer" means a use that includes watchman's trailers, construction equipment sheds, contractor trailers, and similar items incidental to a construction project.

(3) (i) "Real estate model unit" means a dwelling unit temporarily used for display purposes as an example of dwelling units available for sale or rental in a particular subdivision or other residential development.

(ii) "Real estate model unit" includes sales or rental offices for dwellings within the development.

(b) *Where allowed.*

Contractor trailers and real estate model units, including temporary sales or rental offices accessory to a new development, are allowed in any zoning district when accessory to a construction project or a new development.

(c) *No sleeping or cooking accommodations.*

These structures may not contain any sleeping or cooking accommodations, except those located in a model unit used for demonstration purposes only.

(d) *No general office.*

No trailer, unit, or office may be used as the general office or headquarters of any person.

(e) *Durational limits.*

(1) Contractor trailers are limited to a period of not more than the duration of the active construction phase of the project.

(2) Real estate model units, including temporary sales or rental offices, are limited to the active selling and leasing of space in the development or 6 months after issuance of the final use permit, whichever is sooner.

(Ord. 16-581.)

§ 14-415. Permitted temporary uses – Self-storage containers.

(a) *"Temporary storage container" defined.*

In this section, "temporary storage container" means a temporary self-storage container (also known as a "Portable On-Demand Storage" container or "PODS") that is delivered to a residential or commercial use for the resident or business owner to store belongings, which are then picked up and returned to a warehouse until called for.

(b) *Where allowed.*

Temporary storage containers are permitted in any zoning district when used for loading or unloading.

(c) *Not for permanent storage.*

(1) Temporary storage containers may not be used for permanent storage. They may not serve as a substitute for permanent storage needs on the site on which they are located.

(2) Containers may not be permanently attached to the ground, serviced with permanent utilities, or stacked on the site.

(d) *Durational limit.*

Temporary storage containers are limited on site to a period of not more than 72 hours.
(Ord. 16-581.)

§ 14-416. Permitted temporary uses – Tents.

(a) *Commercial districts.*

(1) Tents within commercial districts are permitted for no longer than 14 days and must be in conjunction with a special event or a use located on the same lot. Tents must be removed within 2 days of the end of the event for which it was erected, but in no case may a tent be in place for longer than 14 days.

(2) Every tent must comply with the bulk requirements applicable to accessory structures. Additionally, the Zoning Administrator may restrict the size and location of a tent or tents if the Zoning Administrator determines that they create parking or access problems on the site.

(b) *Residential districts.*

(1) Tents within residential districts are limited to a period of not more than 5 consecutive days and must be located in the rear yard.

(2) Tents within residential districts are exempt from temporary-use permits.

(3) These include tents used for entertainment or assembly purposes.
(Ord. 16-581.)

TITLE 15
SITE DEVELOPMENT STANDARDS

SUBTITLE 1
PURPOSE OF TITLE

§ 15-101. Purpose.

The purpose of this title is to address the regulation of site improvements on a lot, including the regulations applicable to the principal building. This includes measurement methodologies, site design standards, accessory structures and uses, temporary uses, permitted encroachments and performance standards.

(Ord. 16-581.)

SUBTITLE 2
APPLICABILITY OF DEVELOPMENT STANDARDS

§ 15-201. Compliance required.

(a) *Bulk and yard regulations – New construction.*

No structure may be erected except in accordance with the bulk and yard regulations prescribed for the district in which the structure is located or proposed to be located.

(b) *Bulk and yard regulations – Expansion, alteration, etc., of structure.*

No structure may be expanded, altered, or moved so as to reduce the yards and open spaces prescribed for the district in which the structure is located or the expansion, alteration, or movement is proposed to be located.

(c) *Density – Structure design, etc.*

No structure may be erected, expanded, or altered if the structure, as proposed to be erected, expanded, or altered, is arranged, intended, or designed to exceed the density permitted in the district in which the structure, expansion, or alteration is located or proposed to be located.

(d) *Density – Occupancy.*

No structure may be occupied by more than the number of individuals permitted by the bulk regulations of the district in which the structure is located.

(Ord. 16-581; Ord. 17-015.)

§ 15-202. Continued conformity with yard, etc., requirements.

(a) *In general.*

The maintenance of required yards, other open-space, and minimum lot area for a structure is a continuing obligation of the owner of the structure and of the owner of the property on which the structure is located, as long as the structure exists.

(b) *No reallocation to another structure.*

No required yard, other open-space, or minimum lot area allocated to a structure may, by virtue of a change of ownership or for any other reason, be used to satisfy yard, other open-space, or minimum lot area requirements for any other structure.

(c) *Yards, etc., to be on same lot as structure.*

All yards and other open spaces allocated to a structure must be located on the same lot as the structure.

(d) *Division or subdivision of lot.*

No lot may be divided or subdivided in a way that would violate any provision of this Code applicable to the original lot or to the resulting lots.

(Ord. 16-581.)

SUBTITLE 3
MEASUREMENT METHODOLOGIES

§ 15-301. Measurement of building height.

(a) *In general.*

(1) In this subsection, "street wall" means the wall of a building nearest to and facing a street.

(2) For purposes of determining compliance with height limitations, the height of a building is determined by measuring the vertical distance:

(i) from the following:

(A) the mean curb level of the right-of-way on which the property fronts; or

(B) if the front wall of the building is not within 30 feet of the curb, from the average elevation of the ground between that wall and the curb; and

(ii) to the following:

(A) in the case of a flat roof, to the highest point of the roof that adjoins the street wall; or

(B) in the case of a pitched roof, to the mean height level of the roof as measured between the eaves and the peak in the case of pitched roofs.

(b) *Exclusions from height regulations.*

The height regulations of this Code do not apply to the following:

(1) belfries, chimneys, cupolas, domes, grain elevators, fire escapes, flagpoles, flues, minarets, monuments, spires, stacks, steeples, ventilators, and utility poles;

(2) water towers or tanks other than those located on the roof of a structure;

(3) bulkheads, cooling towers, elevator enclosures, monitors, elevator or stairway penthouses, skylights, stage towers and water tanks, and air conditioning units, as long as these structures do not occupy more than 25% in the aggregate of the area of the roof of the structure on which they are located;

(4) roof decks, subject to design review;

(5) parapet walls used to screen mechanical equipment, as long as these walls do not exceed the height necessary to screen the mechanical equipment listed in item (3) of this subsection;

(6) any accessory structures in Subtitle 5 of this title that are allowed to exceed height limitations, subject to any limitations imposed by Subtitle 5 of this title; and

(7) rooftop greenhouses, as long as:

(i) the greenhouses do not exceed 15 feet above the applicable district height limit;

(ii) the greenhouses do not occupy more than 50% of the roof area;

(iii) all lighting used to illuminate a rooftop greenhouse is directed and shielded to prevent illumination of any adjacent lots; and

(iv) all exterior lighting complies with the requirements of § 15-505 {"Exterior lighting"} of this title.

(Ord. 16-581; Ord. 17-015.)

§ 15-302. Measurement of density.

In the residential districts, the maximum number of permitted dwelling units on a lot is determined by dividing the total area of the lot by the lot area requirement that applies to the district in which the lot is located. On a lot with 3 or more dwelling units, a fraction of the total area that is 50% or more of the required lot area factor counts as an additional permitted dwelling unit.

(Ord. 16-581.)

§ 15-303. Measurement of floor area ratio.

For determining floor area ratio, the floor area of a structure is the gross floor area of all floors of the structure, including parking, measured from the outside faces of exterior walls or from the centerlines of party walls.

(Ord. 16-581.)

§ 15-304. Measurement of lot coverage.

In computing the percentage of lot area covered by a structure, the area of the maximum horizontal plane of the entire structure is used.

(Ord. 16-581.)

SUBTITLE 4
EXCEPTIONS

§ 15-401. Street, public transit, and open-space dedications.

(a) *Dedicated area added to area used to compute maximum dwelling units.*

Subject to the requirements and limitations of this section, if the owner of a lot gives or dedicates to the Mayor and City Council of Baltimore any land on or adjacent to the lot for the purpose of establishing or improving a public street, for the purpose of establishing or improving public transit, or for the purpose of establishing open space, the area of the land so given or dedicated may be added to the lot area used to compute the maximum number of dwelling units that, under the bulk and yard regulations of this Code, are permitted on that lot.

(b) *Prerequisites for adding area.*

To qualify for this added area, the land given or dedicated must be:

(1) designated for this purpose on an approved subdivision plat or builders' location plat;

(2) certified by the Planning Commission as essential to overall community planning and not for the sole benefit of any one individual; and

(3) given or dedicated to the City at the request of the Planning Commission.

(c) *Limitation.*

In lieu of any compensation to the owner for a lot contributed under this section, the permitted density of the remaining private development lot, as computed under this section, may exceed by up to, but no more than, 110% of the density that otherwise would be allowed for that lot.

(Ord. 16-581; Ord. 17-015.)

§ 15-402. Inclusionary housing adjustment.

For a residential project that, under City Code Article 13, § 2B-22(c) {"Project benefitting from significant land use authorization or rezoning"} or § 2B-23(c)(1) {"30 or more units: Cost-offsets"}, is entitled to bonus units, the lot area per dwelling unit otherwise required by this Code is reduced to the extent needed to accommodate those bonus units.

(Ord. 16-581.)

§ 15-403. Rear yard reduction.

(a) *In general.*

For a lot that is less than 100 feet deep, the depth of a rear yard required for a dwelling may be reduced 1% for each 1 foot that the lot is less than 100 feet deep, subject to the limitations and requirements of this section.

(b) *Maximum reduction*.

A reduction under this section may not exceed the following:

(1) in the case of an existing detached or semi-detached dwelling that is located in a business district, two-thirds of the required depth; and

(2) in all other cases, one-quarter of the required depth.

(c) *Compliance with other regulations.*

A reduction may be taken under this section only if all other bulk and yard regulations are complied with.

(Ord. 16-581; Ord. 17-015.)

§ 15-404. Building heights near Washington Monument.

Nothing in this Code in any way affects the requirements of Chapter 42, Laws of Maryland 1904, which states:

"[F]rom and after [March 15, 1904], no building, except churches, shall be erected or altered in the City of Baltimore on the territory bounded by the south side of Madison street, the west side of St. Paul street, the north side of Centre street, and the east side of Cathedral street, to exceed in height a point seventy feet above the surface of the street at the base line of the Washington Monument."

(Now codified as § 14-1 of the Code of Public Local Laws of Baltimore City.)

(Ord. 16-581.)

§ 15-405. Limitations in Mount Vernon neighborhood.

(a) *General height limitations.*

The building height limitations and permissions of *Table15-405: Mount Vernon Neighborhood Height Map* apply within the boundaries indicated in that Table for the Mount Vernon Neighborhood. These building heights control in place of the building height regulations of the underlying zoning district.

(b) *Other limitations*.

Within the boundaries indicated in *Table 15-405* for the Mount Vernon Neighborhood:

(1) when calculating the height of a building for compliance with height limitations, mechanical equipment, including heating, ventilation, and air-conditioning units, on top of the building are included in that calculation;

(2) new primary-use surface parking lots are prohibited; and

(4) for new construction, the minimum lot area per dwelling unit is 200 square feet.

(Ord. 16-581.)

SUBTITLE 5
ACCESSORY STRUCTURES AND USES

§ 15-501. General regulations.

(a) *Must be on same lot as principal structure.*

An accessory structure or use must be limited to and located on the same lot with the use of the principal structure to which it is accessory.

(b) *Maximum coverage of required rear yard.*

The total area of all accessory structures may not occupy more than 50% of the area of a required rear yard.

(c) *Maximum height.*

Unless otherwise permitted or restricted by this subtitle, no accessory structure may exceed 15 feet in height.

(d) *Compliance with yard regulations.*

Unless otherwise permitted or restricted by this subtitle, accessory structures must comply with the yard requirements of the district.

(e) *Construction of accessory may not precede construction of principal.*

No accessory structure may be erected on any lot before construction of the principal structure to which it is accessory.

(f) *Effect of attachment to principal*.

If an accessory structure, such as an attached garage, is attached to a principal structure by any wall or roof construction, it is considered to be a part of the principal structure and must comply in all respects with the requirements of this Code that apply to the principal structure.

(Ord. 16-581.)

§ 15-502. Amateur (ham) radio equipment.

(a) *"Amateur ... radio equipment" defined*.

(1) "Amateur (ham) radio equipment" means equipment for broadcasting an amateur (ham) radio station licensed by the Federal Communications Commission.

(2) "Amateur (ham) radio equipment" includes:

(i) a tower or tower-like structure supporting a single, radiating antenna platform; and

(ii) other broadcasting equipment.

(b) *Requirements for towers,*

Towers that solely support amateur (ham) radio equipment and conform to all applicable performance criteria as set forth in Subtitle 7 of this Title are permitted in the required rear yard. Towers may not exceed the maximum building height of the applicable district, unless a taller tower is technically necessary to engage successfully in amateur radio communications in accordance with subsection (e) of this section. In the single-family residential districts, all towers must be set back 10 feet from any lot line.

(c) *Exception for stealth design.*

(1) Certain additional types of antenna systems that are not freestanding towers are permitted in any yard if they implement stealth design and receive design review approval.

(2) To qualify as a stealth design, antennas must be within an enclosed structure or otherwise screened from public view in accordance with the requirements of the Baltimore City Landscape Manual.

(d) *Minimizing antennae visibility.*

Antennae may be ground-, building- or roof-mounted. Every effort must be made to install radio antennae in locations that are not readily visible from neighboring properties or from the public right-of-way, excluding alleys.

(e) *Exceeding height limits.*

An antenna or tower that is proposed to exceed the height limitations is a conditional use. The operator must provide evidence that a taller tower or antenna is necessary to engage successfully in amateur radio communications. In addition, the applicant must provide evidence that the tower or antenna is not a hazard to birds (i.e., minimal chance of bird strikes). The tower or antenna must conform to all applicable performance criteria as set forth in Subtitle 7 of this title. As part of the application, the applicant must submit a site plan showing the proposed location of the tower or antenna, as well as its relation to the principal building and any additional accessory structures.

(f) *Exemption for City-owned and -operated antennae, towers.*

Antennae and towers owned and operated by the City are exempt from these requirements.
(Ord. 16-581; Ord. 17-015.)

§ 15-503. Automobile charging station (electric and solar).

Parking spaces within parking lots or parking garages, whether the parking is a principal use or accessory to a principal use, may include electric automobile charging stations, including models that charge by solar energy.
(Ord. 16-581; Ord. 17-015.)

§ 15-504. Carriage house.

An accessory carriage house existing on June 5, 2017, in a Residential District or in an OR District may be subdivided and converted into a detached dwelling, if:

(1) the new lot area meets the minimum lot and yard requirements that apply to rowhouse dwellings in the applicable district;

(2) the building contains at least 1,750 square feet of gross floor area;

(3) all other requirements of this Code and Baltimore City Subdivision Regulations are met or a variance is obtained; and

(4) 1 additional parking space is provided for each dwelling unit created.

(Ord. 16-581; Ord. 17-015.)

§ 15-505. Exterior lighting.

(a) *In general,*

The following exterior lighting requirements apply to lighting on private property.

(b) *Glare and light trespass prohibited.*

(1) No exterior lighting may glare into, or upon, the surrounding area or any residential premises. In addition, no exterior lighting may be used in any manner that could interfere with the safe movement of motor vehicles on public streets. The light level may not be greater than one-half footcandle at a residential property line and 1 footcandle at any non-residential property line or public right-of-way line.

(2) Specifically, the following types of light trespass are prohibited:

(i) any light not designed for roadway illumination that produces direct or reflected glare that could disturb the operator of a motor vehicle;

(ii) any light that may be confused with, or construed as, a traffic control device, except as authorized by federal, state, or local government.

(3) Exterior lighting must be designed as down-lighting. Shielded lighting, unless specifically permitted by subsection (c) of this section, is required.

(c) *Unshielded lighting prohibited; Exceptions*.

The use of unshielded lighting, including incandescent light bulbs hung or strung on poles, wires, or any other type of support, are prohibited, except on a temporary basis in areas where approved carnivals, fairs, or other similar activities are held and only while those activities are taking place.

(d) *Height limits.*

(1) The maximum height of light poles on private property, as measured from grade at the base to the bottom of the luminaire, is as specified below. These standards do not apply to public right-of-way lighting. Permitted light pole heights are as follows.

(2) For non-residential uses:

(i) Lights poles and building-mounted fixtures must be designed with fully shielded luminaires. These poles or mounts may not exceed 25 feet in height.

(ii) Light poles for outdoor recreational facilities may not exceed 35 feet in height. Exterior lighting for outdoor recreation areas is subject to design review. Light poles for outdoor recreational facilities that exceed 35 feet in height are conditional uses.

(3) For residential uses:

(i) Light poles for single-family detached and semi-detached dwellings and rowhouse dwellings may not exceed 6 feet in height.

(ii) Light poles for multi-family uses may not exceed 12 feet in height.

(iii) Under-soffit lighting mounted on a residential dwelling may not be mounted higher than 15 feet above the finished floor height of the ground floor.

(Ord. 16-581.)

§ 15-506. Greenhouses and hoop-houses.

Any lighting used to illuminate a greenhouse must be directed and shielded so as to minimize illumination of any adjacent lots. All exterior lighting must comply with the requirements of § 15-505 {"Exterior Lighting"} of this subtitle.

(Ord. 16-581; Ord. 17-015.)

§ 15-507. Home occupation.

(a) *In general.*

The home occupation must be conducted entirely within the dwelling and must be clearly incidental and secondary to the use of the dwelling for residential purposes.

(b) *Family members conducting must reside in dwelling.*

A home occupation may not be established before the members of the family conducting the home occupation take possession of and reside in the dwelling.

(c) *Limit on non-family employees.*

No more than 1 individual other than a family member residing on the premises may be employed as part of a home occupation.

(d) *Limits on client or customer visits, traffic generation, etc.*

The use may not create additional pedestrian, automobile, or truck traffic in excess of the normal amount typical for the area. Client or customer visits to the site are limited to no more than 3 a day and 10 a week. No more than 1 truck or van, whose capacity may not exceed 1 ton, may be used in any manner with the home occupation. Vehicles may not contain advertising for the home occupation.

(e) *Delivery methods.*

The receipt, sale, or shipment of deliveries is not permitted on or from the premises, with the exception of regular U.S. Mail or a shipping service that is characteristic of service to residential neighborhoods.

(f) *Limits on noise, glare, odors, outside storage or displays, etc., prohibited.*

A home occupation may not generate noise, solid waste, vibration, glare, fumes, odors, or electrical interference beyond what normally occurs in a residential use. No outside storage or display of materials, merchandise, inventory, or heavy equipment is permitted.

(g) *Limits on exterior alterations.*

No exterior alteration that changes the residential character of the principal building is permitted.

(h) *No signs other than nameplate permitted.*

No signs are permitted except for a nameplate. Nameplates must comply with § 17-807 {"Nameplates"} of this Code.

(i) *Motor vehicle repair or service prohibited.*

Any type of motor vehicle repair or service is a prohibited home occupation.

(j) *Day-care homes not subject to section.*

Day-care homes are not considered a home occupation.

(Ord. 16-581.)

§ 15-508. Mechanical equipment.

(a) *In yards.*

In all districts, all ground-based mechanical equipment, including heating, ventilating, and air-conditioning units and back-up generators, may be located in any yard. However, if the equipment is in an interior-side yard, it must be at least 3 feet from the side lot line.

(b) *Screening requirements.*

If ground-based mechanical equipment is located in a non-residential district adjoining a Residential, Office-Residential, or Industrial Mixed-Use District, the equipment must be screened from public view in accordance with the requirements of the Baltimore City Landscape Manual.

(c) *Roof access.*

Any mechanical equipment located on the roof of any structure in any zoning district must be located to allow safe access to the roof.

(Ord. 16-581; Ord. 17-015.)

§ 15-509. Outdoor sales and displays by retail goods establishments.

(a) *In general.*

Subject to the conditions of this section, a retail goods establishment is allowed, as an accessory use, to display and sell its merchandise outdoors.

(b) *Merchandise excluded from display.*

The outdoor sales or display of the following merchandise is prohibited: tires, mattresses, furniture, appliances, and dirt bikes.

(c) *Using public right-of-way.*

No sales or display area is permitted in any public right-of-way unless a minor privilege permit is obtained.

(d) *Outdoor storage.*

Outdoor storage of goods not offered for sale is prohibited, as provided in § 15-510 {"Outdoor storage"} of this subtitle.

(e) *Using parking area.*

A portion of the establishment's parking area that is in excess of and not needed to meet the establishment's off-street parking requirements may be used for outdoor sales and display on a temporary basis only, in terms of both display structure and goods displayed or sold (no permanent display structures permitted in parking areas). However, no more than 10% of the portion that exceeds and is not needed to meet parking requirements may be used for the temporary outdoor sales and display.

(f) *Screening area abutting residential district.*

If the rear or interior-side yard of an outdoor sales and display area abuts a Residential District, the area must be screened from public view in accordance with the requirements of the Baltimore City Landscape Manual.

(g) *Screening vehicle display.*

If an outdoor sales and display lot of a motor vehicle or recreational vehicle dealership or rental establishment abuts a public right-of-way, other than an alley, the lot must be screened in accordance with the requirements of the Baltimore City Landscape Manual.

(Ord. 16-581; Ord. 17-015.)

§ 15-510. Outdoor storage.

(a) *Uses allowed accessory outdoor storage.*

(1) The following uses are allowed as accessory outdoor storage:

(i) greenhouses and nurseries, including the growing of plants in the open;

(ii) industrial uses within the OIC, C-4, I-1, I-2, and MI Districts;

(iii) mini-warehouses in the C-4, I-MU, and I-1 Districts;

(iv) motor vehicle dealerships or rental establishments (prohibited when establishment is required to be fully enclosed);

(v) motor vehicle operations facilities;

(vi) motor vehicle service and repair – storage of vehicles under repair only (prohibited when establishment is required to be fully enclosed); and

(vii) outdoor storage yards and contractor storage yards.

(2) Additional accessory outdoor storage may be approved by as a conditional use.

(b) *Standards.*

Permitted outdoor storage uses must comply with the following provisions:

(1) no required parking area may be used as outdoor storage;

(2) all outdoor storage must meet minimum yard requirements;

(3) all materials stored must be related to the business conducted on the property; and

(4) except in the I-2 and MI Districts, where no screening is required, all outdoor storage must be screened from public view in accordance with the requirements of the Baltimore City Landscape Manual.

(Ord. 16-581; Ord. 17-015.)

§ 15-511. Parking garages (residential).

(a) *In general.*

The following design standards apply to all residential parking garages. Attached garages are not considered an accessory structure but are subject to the design standards and regulations of this section for attached garages.

(b) *Front-loaded attached garages.*

(1) Front-loaded attached garages are discouraged. New front-loaded attached garages are prohibited where rear or side access to the lot is available, and restricted to areas in which the City's curb cut policy would allow for a curb cut to access the garage. Rear-loaded and side-loaded attached garages are preferred.

(2) Front-loaded attached garages may not occupy more than 50% of the width of the front facade of the dwelling, as measured along the building line that faces the street.

(3) Front-loaded attached garages must be located at least 5 feet behind the main front facade of the dwelling. This measurement must be taken from the part of the front facade that adjoins the garage, except that the measurement may be taken from the part of the house closest to the street if all of the following conditions are met:

(i) the front facade of the house is irregular, i.e., the front foundation is not a straight line;

(ii) the portion closest to the street is actual living space; and

(iii) the measurement is not taken from a porch, bay window, turret, or similar architectural feature that protrudes from the facade.

(4) Windows, doors, and roof treatments of that part of a front-loaded attached garage facing the street must incorporate architectural detail expressive of a residence.

(5) Upper level dormers and pitched roof elements must be used to de-emphasize a front-loaded attached garage. Garage openings, windows, columns, trims, decorative paneling, and color must de-emphasize the visual impact of the garage in relation to the building as a whole.

(c) *Detached garages.*

(1) Detached garages are permitted in the rear yard and must be accessed from the rear of the lot if rear access is available. Detached garages accessed from the front of the lot are restricted to areas in which the City's curb cut policy would allow for a curb cut to access the garage.

(2) On lots of 7,300 square feet or less in area, detached garages may not exceed 660 square feet in area.

(d) *All residential garages.*

No residential garage may be used for commercial body repair, painting, or engine rebuilding. *(Ord. 16-581; Ord. 17-015.)*

§ 15-512. Porches.

(a) *Definitions.*

(1) In this section, the following terms have the meanings indicated.

(2) (i) "Enclosed porch" means a porch that is enclosed by walls, screens, or other material on 2 or more sides.

(ii) "Enclosed porch" includes a screened-in porch.

(3) "Unenclosed porch" means a porch that is open on 2 or more sides, even if the porch has a railing along the sides.

(b) *In yards.*

Unenclosed porches may encroach 8 feet into any required front or corner-side yard. Unenclosed porches in the interior-side yard must be located at least 4 feet from the interior-side lot line. Enclosed porches must meet all minimum yard requirements.

(c) *Front porches to be open; Original porches to be retained and unfilled.*

Front porches must remain open. Original porches must be retained and may not be filled in with opaque materials.

(d) *Rowhouses – Infill construction.*

For infill construction of 1 or 2 rowhouse units within a coordinated group of existing rowhouses, the following standards must be met:

(1) porch posts and railings must be compatible with the other houses in the row;

(2) steps must be oriented in the same manner as other houses in the row; and

(3) replacement steps must match the material of the steps original to the neighborhood.

(e) *Rowhouses – Replacing porch elements.*

When replacing porch elements, the original elements of the row must be matched as closely as possible. T-1-11 paneling, plywood, vinyl and aluminum siding, and cinderblock are prohibited. Columns and railings are prohibited when not part of the original elements of the row.

(f) *Foundations.*

Foundations of ashlar stone must be repaired and repointed with matching mortar and mortar joints.

(Ord. 16-581.)

§ 15-513. Public park accessory uses.

The following accessory uses are permitted within a publicly-owned park:

(1) concession services, as follows:

(i) sales of food and sundries; and

(ii) rental of recreational equipment;

(2) grandstands as part of athletic fields, which grandstands must be located at least 200 feet from the nearest lot line in a residential or office-residential district;

(3) information kiosks;

(4) picnic shelters and gazebos;

(5) public restrooms; and

(6) mobile storage structures.

(Ord. 16-581.)

§ 15-514. Recycling collection stations.

(a) *"Recycling collection station" defined.*

(1) "Recycling collection station" means a receptacle, usually a trailer or roll-off, that is located on a hard surface and used for collecting recyclable materials, including paper (corrugated boxes, high grade paper, newspapers, and the like), cans (aluminum, tin, or bi-metal), aluminum scrap, non-ferrous metal (copper, brass, zinc, lead, or tin), glass bottles, and plastics.

(2) "Recycling collection station" includes receptacles for the collection of leaf and yard waste.

(b) *Standards.*

Recycling collection stations are conditional uses, subject to the following standards:

(1) No mechanical processing or shredding is allowed on-site.

(2) In approving a recycling collection station, the Board of Municipal and Zoning Appeals must consider:

(i) the size of the transfer trailer or roll-off and its location on the site;

(ii) availability of off-street parking and the impact on any existing parking lot;

(iii) whether an attendant is to be provided or required and the hours of operation, which must be clearly posted on the trailer or roll-off;

(iv) impact on adjacent residences or businesses;

(v) whether other recycling collection stations are in the immediate neighborhood;

(vi) whether landscaping or screening is needed and what is to be provided; and

(vii) compliance with all applicable building, housing, and health code standards.

(Ord. 16-581; Ord. 17-015.)

§ 15-515. Refuse disposal containers and refuse storage areas.

(a) *Location.*

Refuse disposal containers and refuse storage areas must be located to the rear or side of structures.

(b) *Recycling bins.*

Refuse disposal containers and refuse storage areas may store recycling bins.

(c) *Enclosure of containers – Required.*

(1) All refuse disposal containers must be fully enclosed on 3 sides by a 6-feet high or higher:

(i) solid wood or simulated wood screen fence;

(ii) opaque masonry wall (stone, stucco, or brick); or

(iii) principal structure wall.

(2) The materials used for the enclosure must complement the architecture of the principal structure.

(3) The enclosure must be gated.

(d) *Enclosure of containers – Use of exterior wall extension.*

An extension of an exterior principal structure wall may be used as one of the 3 walls for enclosing a refuse disposal container as long as the extension meets the minimum 6-feet high requirement and is of the same building materials as the principal structure.

(e) *Qualified exception for on-site construction.*

(1) This section does not apply to a refuse disposal container used as part of on-site construction as long as:

(i) the container is maintained on the construction site; or

(ii) a minor privilege permit is obtained to allow the container on the public right-of-way.

(2) The container must be removed once construction is complete.

(Ord. 16-581; Ord. 17-015.)

§ 15-516. Satellite dish antennas.

(a) *General requirements.*

(1) Satellite dish antennas must be permanently installed on a building, in the ground or on a foundation, and may not be mounted on a portable or movable structure.

(2) Subject to operational requirements, the dish must be of a neutral color, such as white or grey, to blend with the surroundings as best as possible. No signs or advertising are permitted on the satellite dish, aside from the logos of the dish's service provider or manufacturer.

(3) Compliance with all federal, state and local regulations is required in the construction, installation, and operation of satellite dish antennas.

(4) All exposed surfaces of the antenna must be kept clean and all supports must be painted to maintain a well-kept appearance. Antennas no longer in use must be removed.

(b) *Small satellite dish antennas.*

(1) Satellite dish antennas that are1 meter or less in diameter ("small dish antennas") are subject to the general requirements of subsection (a) of this section.

(2) Satellite dishes are not permitted on any facade that adjoins a street unless a report is submitted to verify that this facade is the only location that receives an adequate signal.

(c) *Large satellite dish antennas.*

(1) *In general.*

Satellite dish antennas that are more than 1 meter in diameter ("large dish antennas") are subject to the general requirements of subsection (a) of this section.

(2) *Residential districts.*

(i) In residential districts, a large dish antennas is allowed only in the rear yard, and must be set back from all lot lines a distance that is at least equal to the height of the dish, but in no case less than 5 feet. Roof-mounting is prohibited.

(ii) The overall height of a large dish antenna cannot exceed 12 feet.

(iii) A large dish antenna must be screened from public view in accordance with the requirements of the Baltimore City Landscape Manual.

(3) *Non-residential districts*.

(i) In non-residential districts, a large dish antenna is allowed only in the rear or interior-side yard and must be set back from all lot lines a distance that is at least equal to the height of the dish, but in no case less than 5 feet.

(ii) Roof-mounting is allowed in non-residential districts only if the large dish antenna is in scale with the overall building mass and location and is screened by an architectural feature. The visible portion of the dish may not exceed 25% of the corresponding height or width of the screen.

(iii) A large dish antenna must be screened from public view in accordance with the requirements of the Baltimore City Landscape Manual.

(Ord. 16-581; Ord. 17-015.)

§ 15-517. Alternative energy systems: Solar.

(a) *Building permit requirements*.

Building permit applications for solar alternative energy systems must be accompanied by a line drawing of the electrical components in sufficient detail to allow for a determination that the manner of the installation conforms to all electrical codes.

(b) *Height, setback limitations – In general.*

(1) Solar alternative energy systems must be installed to rise no more than 42 inches from a roof surface.

(2) A roof-mounted solar alternative energy system is considered a permitted height exception and is not subject to the building height limitations of the district.

(3) In the case of a flat roof, solar alternative energy systems must be setback 3 feet from the front facade.

(c) *Height, yard, and setback limitations – Ground-mounted.*

(1) A ground-mounted solar alternative energy system is permitted in all yards and must be at least 3 feet from any lot line.

(2) Ground-mounted solar alternative systems are subject to the following height limitations:

(i) for a commercial alternative energy system, the system may not exceed 15 feet in height; and

(ii) for a community-based or private alternative energy system:

(A) a system located in a side or rear yard may not exceed 10 feet in height; and

(B) a system located in a front yard may not exceed 30 inches in height.

(d) *Screening and safety – Ground-mounted.*

All ground-mounted systems must:

(1) be screened from public view in accordance with the requirements of the Baltimore City Landscape Manual; and

(2) display warning signs indicating voltage and dangers.

(Ord. 16-581; Ord. 17-015.)

§ 15-518. Alternative energy systems: Wind.

(a) *Building permit requirements.*

Building permit applications for wind energy systems must be accompanied by a line drawing of the electrical components in sufficient detail to allow for a determination that the manner of the installation conforms to all electrical codes.

(b) *Height limitations.*

(1) The maximum height of any ground-mounted wind energy system is 65 feet or 20 feet above the tree line, whichever is greater.

(2) The maximum height of any roof-mounted wind alternative energy system mounted on a detached accessory structure is 15 feet above the maximum permitted height for that structure.

(3) The maximum height of any roof-mounted wind energy system mounted on a principal structure is 10 feet above the maximum permitted height for that structure. However, this limitation does not apply to principal structures over 175 feet in height, in which case there is no limit on the height of a roof-mounted wind alternative energy system.

(4) For purposes of this section, maximum height is the total height of the turbine system, including the tower and, if designed with turbine blades, the maximum vertical height of the turbines blades. Maximum height is therefore calculated by measuring the length of a prop at maximum vertical rotation to the base of the tower. The maximum height of any ground-mounted wind energy system is measured from the length of a prop at maximum vertical rotation to grade.

(5) If turbine blades are part of the system, no portion of the turbine blades may be within 20 feet of the ground.

(c) *Yard and setback limitations.*

(1) Ground-mounted wind alternative energy systems may be located in the rear yard only.

(2) No part of the wind system structure, including guy wire anchors, may extend closer than 10 feet to any lot line. The system tower must be setback from all lot lines equal to the height of the system.

(d) *Blade speed controls.*

All wind alternative energy systems must be equipped with manual (electronic or mechanical) and automatic over-speed controls to limit the blade rotation speed to within the design limits of the wind alternative energy system.

(e) *Noise limitations.*

(1) Except as provided in this subsection, wind alternative energy systems may not exceed 60 dBA, as measured at the closest neighboring inhabited dwelling.

(2) This level, however, may be exceeded during short-term events, such as utility outages or severe windstorms.

(f) *Small-wind certification.*

(1) Wind turbines must be certified by a small-wind certification program recognized by the American Wind Energy Association or the U.S. Department of Energy.

(2) Alternatively, for a non-certified wind turbine, the applicant must submit to the Building Official a description of the safety features of the turbine prepared by a registered mechanical engineer.

(g) *Compliance with FAA regulations.*

Wind alternative energy systems must comply with applicable FAA regulations, including any necessary approvals for installations close to airports.

(h) *Notice to utility.*

No wind alternative energy system may be installed until evidence has been submitted to the Building Official that the utility company has been informed of the customer's intent to install an interconnected customer-owned generator.

(Ord. 16-581; Ord. 17-015.)

SUBTITLE 6
PERMITTED ENCROACHMENTS

§ 15-601. Permitted projections and obstructions into required yards.

Except for the projections and obstructions specified in *Table 15-601: Permitted Encroachments into Required Yards*, every part of a required yard or of any other required open space must be open and unobstructed from the ground to the sky.

(Ord. 16-581.)

SUBTITLE 7
PERFORMANCE STANDARDS

§ 15-701. Purpose.

The performance standards in this subtitle are designed to promote and protect commercial districts, business areas, and the I-MU and I-1 Districts, as light industrial areas, thereby promoting and maintaining the most appropriate and beneficial use of these areas. The application of these standards protect business and residential areas in or adjacent to a commercial district or an I-MU or I-1 District from adverse effects that might otherwise result from the operation of the uses allowed in those districts.

(Ord. 16-581; Ord. 17-015.)

§ 15-702. Applicability of standards.

(a) *In general.*

Except as specified in subsection (b) of this section, the performance standards in this subtitle apply to:

(1) all uses in an I-MU and I-1 District; and

(2) all activities in a commercial district that involve the production, processing, cleaning, servicing, testing, or repair of materials, goods, or products.

(b) *Qualified exception for previously established uses.*

Uses lawfully established before these performance standards were enacted or extended to apply to the district in which they are located need not comply with the standards. However, if that use is later expanded, the expansion must comply with all applicable performance standards.

(Ord. 16-581; Ord. 17-015.)

§ 15-703. Environmental performance standards.

(a) *In general.*

All uses in the commercial districts and the I-MU and I-1 Districts must be operated so as to comply with the performance standards described in this section. In addition to these performance standards, all uses must be constructed, maintained, and operated so as not to be injurious to the use and occupation of the adjacent premises by reason of the emission or creation of noise, vibration, radiation, fire, explosive hazard, or glare. Nothing in this section may be construed to alter, change, modify, or abrogate any authority granted exclusively to any state or federal regulations.

(b) *Noise.*

No activity or use may be conducted in a manner that generates a level of sound as measured on another property greater than that allowed by federal, state, or local regulations. These

limits do not apply to construction noises, noises emanating from safety signals or warning devices, noises not directly under the control of the owner or occupant of the property, or transient noises from moving sources, such as motor vehicles, railroads, or aircraft.

(c) *Glare and heat.*

Any activity or the operation of any use that produces glare or heat must be conducted so that no glare or heat from the activity or operation is detectable at any point off the lot on which the use is located. Flickering or intense sources of light must be controlled or shielded so as not to cause a nuisance across lot lines.

(d) *Vibration.*

No earthborne vibration from the operation of any use may be detectable at any point off the lot on which the use is located.

(e) *Dust and air pollution.*

Dust and other types of air pollution, borne by the wind from sources such as storage areas, yards, roads, conveying equipment, and the like on the lot, must be kept to a minimum by appropriate landscaping, screening, sheltering, paving, fencing, wetting, collecting, or other acceptable means.

(f) *Discharge and disposal of radioactive and hazardous waste*.

The discharge or disposal of radioactive or hazardous waste materials must comply with all applicable federal, state, and local laws, rules, and regulations that govern those materials or waste, generally. Radioactive and hazardous waste materials must be transported, stored, and used in conformance with all applicable federal, state, and local laws, rules, and regulations.

(g) *Odors.*

Any condition or operation that results in the creation of odors of an intensity and character as to be detrimental to the health and welfare of the public or that interferes unreasonably with the comfort of the public, must be removed, stopped, or modified so as to remove the odor.

(h) *Toxic substances.*

The storage, handling, or transport of toxic substances must comply with federal, state, and local laws, rules, and regulations.

(i) *Fire and explosion hazards.*

Materials that present potential fire or explosion hazards must be transported, stored, and used only in conformance with all applicable federal, state, and local regulations.

(Ord. 16-581.)

{PAGE LEFT INTENTIONALLY BLANK}

TITLE 16
OFF-STREET PARKING AND LOADING

SUBTITLE 1
PURPOSE OF TITLE

§ 16-101. Purpose

The off-street parking and loading regulations of this title are intended to:

(1) provide accessible, attractive, secure, and well-maintained off-street parking and loading areas with the appropriate number of spaces in proportion to the needs of the proposed use;

(2) increase public safety by reducing congestion of public streets;

(3) encourage the use of alternative modes of transportation where appropriate; and

(4) ensure that parking requirements are tailored to maintain pedestrian environments and sensitive to the urban fabric of the City.

(Ord. 16-581.)

SUBTITLE 2
GENERAL APPLICABILITY

§ 16-201. Existing off-street parking facilities.

(a) *No reduction below requirements.*

The number of existing off-street parking and loading spaces may not be reduced below the requirements of this title. If the number of those existing spaces is already less than the requirements of this title, it may not be further reduced.

(b) *Transition rules.*

If a building permit was lawfully issued before June 5, 2017, and if construction began within 180 days of the permit's issuance, off-street parking and loading spaces must be provided in the amount required for the issuance of that building permit, regardless of the requirements of this title.

(Ord. 16-581; Ord. 17-015.)

§ 16-202. Damage or destruction.

If a structure is reconstructed or repaired after being damaged or destroyed, off-street parking and loading facilities may be restored or maintained in an amount equivalent to that at the time of the damage or destruction. However, it is not necessary to restore or maintain parking and loading facilities in excess of the applicable requirements of this title.

(Ord. 16-581.)

§ 16-203. Additions or expansions to existing structures.

(a) *Parking spaces req'd for increased intensity.*

If a structure is increased through the addition of a dwelling unit, floor area, seating capacity, or other unit of measurement, off-street parking spaces must be provided for that increased intensity, as required by this title.

(b) *Limited exception for preexisting non-residential uses.*

However, a non-residential use that was lawfully established before the June 5, 2017, does not need to provide additional off-street parking for that increase until the aggregate increase in units of measurement equals 10% or more of the units of measurement existing on June 5, 2017. Once that level of increase has been reached, however, off-street parking facilities must be provided, as required by this title, for the total increase.

(Ord. 16-581; Ord. 17-015.)

§ 16-204. Change in use.

If a structure or land changes to a new use, the new use must provide the amount of parking and loading spaces required by this title.

(Ord. 16-581.)

§ 16-205. Provision of additional spaces and parking maximums.

Nothing in this title prevents the voluntary establishment of additional off-street parking or loading facilities. However, in no case may off-street parking be provided in excess of double the requirements of this Code, except for detached and semi-detached dwellings, to which no maximum applies. All regulations governing the location, design, and control of these facilities must be in accordance with this title.

(Ord. 16-581.)

§ 16-206. Prohibited uses of off-street parking and loading spaces.

(a) *Other than for motor vehicles, bicycles.*

All off-street parking spaces required by this title may only be used for the parking of motor vehicles and bicycles.

(b) *Storing vehicles for sales or hire.*

In no event may required parking spaces be used for the temporary or permanent storage of vehicles for sale or hire.

(c) *Vehicle repair or service.*

No motor vehicle repair work or service of any kind, except emergency repair service, is permitted in any off-street parking space.

(d) *Using space allocated to loading space to meet req't for parking space or vive-versa.*

No space allocated to an off-street loading space may be used to satisfy the requirement for an off-street parking space or access aisle, or portion of either. Conversely, the area allocated to an off-street parking space may not be used to satisfy the requirement for an off-street loading space or portion of a space.

(Ord. 16-581.)

§ 16-207. Computation of off-street parking requirements.

(a) *In general.*

The total number of required parking, loading, and bicycle spaces is based on the requirements for the use of the lot. However, if a lot contains more than 1 use, the number of required spaces is the sum of the separate requirements for each use. All off-street parking facilities must be completed before occupancy of the structure.

(b) *Computation standards.*

(1) In computing the number of off-street parking, loading, or bicycle spaces required by this title, the following standards of computation apply.

(2) A fraction of less than one-half may be disregarded, and a fraction of one-half or more is counted as 1 parking or loading space.

(3) In places of assembly in which patrons or spectators occupy benches, pews or similar seating facilities, each 24 inches of the seating facility is counted as 1 seat for the purpose of determining the requirement for off-street parking facilities. Floor area of a prayer hall is counted as one 1 seat per marked prayer mat space or, if prayer mat spaces are not marked, 1 seat for every 5 square feet in the prayer hall.

(4) Except as otherwise specified, parking or loading spaces required on an employee basis is based on the maximum number of employees normally present on the premises at any one time. If the determination of the number of parking spaces is based on the number of employees, the owner and the manager are counted as employee.

(Ord. 16-581.)

§ 16-208. Accessible parking requirements.

With the exception of single-family, detached and semi-detached, dwellings and rowhouse dwellings, in all off-street parking facilities where parking is provided for employees, visitors, or both, accessible parking spaces must be provided. The number of accessible parking spaces must be included in the total number of required parking spaces and must be in accordance with the applicable requirements of the Maryland Accessibility Code, and all other governing codes and applicable laws. These spaces must comply with the design standards in the Maryland Accessibility Code. These spaces must be identified by a sign and pavement markings indicating parking for the disabled only.

(Ord. 16-581.)

SUBTITLE 3
CONSTRUCTION OF FACILITIES

§ 16-301. Site plan review requirements.

(a) *In general.*

Site plan review is required before any construction or alteration of or addition to any off-street parking facility of 5 or more parking spaces or the construction of a new loading berth.

(b) *"Construction, alteration, or addition" described.*

(1) *Inclusions.*

For purposes of this section, construction, alteration, or addition includes all paving of previously unpaved surfaces, replacement of pavement with new binder and surface courses, construction of curbing, installation of new parking lot landscaping, and similar activities.

(2) *Exclusions.*

Construction, alteration, or addition does not include maintenance activities such as replacement of existing landscaping, repair of existing curbing, repairs, sealing, re-striping, or placement of surface course pavement over previously paved areas.

(Ord. 16-581.)

§ 16-302. Time of completion.

Off-street parking and loading facilities required by this title must be completed before issuance of a use permit for the use these facilities serve.

(Ord. 16-581.)

SUBTITLE 4
DESIGN OF OFF-STREET PARKING FACILITIES

§ 16-401. Location of off-street parking.

(a) *On-site of use or structure served..*

Unless otherwise permitted by this title, all off-street parking facilities must be located on the same lot as the use or structure served.

(b) *Front yard prohibited in certain commercial districts.*

In the C-1, C-1-E, C-1-VC, and C-2 Districts, off-street parking is prohibited in front of the front building line.

(c) *Off-site facilities*

(1) Off-street parking facilities may be located off-site if:

(i) the parking facilities are located in a zoning district where this parking is permitted or allowed as a conditional use;

(ii) the land on which the off-site parking facilities are located is within 600 feet of the lot line of the use or structure served; and

(iii) the off-site parking facilities are on a lot possessed by the record titleholder of the lot occupied by the structure or use to be served by the parking facilities.

(2) For the purposes of this subsection, possession of the facilities may be by either:

(i) deed; or

(ii) 20-year or longer recorded deed restriction.

(3) The location of the off-site parking facilities and the term and contents of the deed or deed restriction permitting the owner of the use or structure served to use the off-site facilities are subject to the approval of the Zoning Administrator. The deed or deed restriction must be recorded in the Land Records of Baltimore City, binding the owner of that lot and the owner's heirs and assigns to maintain the required number of parking spaces for the duration of the use served or the term of the deed or deed restriction, whichever first terminates.

(d) *Valet service.*

Notwithstanding the restrictions of subsections (a), (b), and (c) of this section, a use may utilize a valet service in accordance with City Code Article 31, Subtitle 14 {"Valet Parking"}. However, the off-site parking facility must provide the required number of spaces. The use must certify that valet service will be used and that the required number of spaces has been provided.

(e) *PC Subdistricts*.

In a PC Subdistrict, off-street parking may be located off-site as long as the required parking facilities are located in that or any other PC Subdistrict.

(Ord. 16-581; Ord. 17-015.)

§ 16-402. Minimum dimensions of off-street parking spaces.

(a) *As in Table 16-402.*

Off-street parking spaces must be designed in accordance with *Table 16-402: Off-Street Parking Dimensions*.

(b) *Vertical clearance*.

(1) All parking spaces must have a minimum vertical clearance of 7 feet 6 inches.

(2) Floors accessible to ADA-compliant vans must have a minimum vertical clearance of 8 feet 2 inches.

(Ord. 16-581; Ord. 17-015.)

§ 16-403. Access.

(a) *In general.*

(1) *Parking space connection to aisle or driveway.*

Each off-street space must open directly onto an aisle or driveway wide enough to provide adequate means of vehicular access to the parking space.

(2) *Least interference with other vehicles.*

All off-street parking facilities must provide appropriate means of vehicular access in a manner that least interferes with traffic movement and in a way that permits vehicles to enter or leave the parking spaces without having to move any other vehicle.

(b) *Access to be from street, alley, driveway, or easement.*

All required off-street parking facilities must have vehicular access from a street, an alley at least 10 feet wide, a driveway, or cross-access easement connection.

(c) *When access from alley required.*

In the residential and commercial districts, if off-street parking areas can be accessed from an alley at least 15 feet wide, access from the alley is required and new curb cuts along the public right-of-way are prohibited.

(d) *One-way traffic aisles as in Table.*

Within off-street parking facilities, one-way traffic aisles must be designed in accordance with *Table 16-402*.

(Ord. 16-581.)

§ 16-404. Driveways.

(a) *Conformance with DoT Book of Standards.*

The design of every driveway with access onto a City-owned roadway must conform to the City Department of Transportation's Book of Standards.

(b) *Distance from side lot line.*

(1) Driveways must be located at least 1 foot from the side lot line.

(2) However, a residential driveway may be located on the lot line if it physically abuts a driveway on the adjoining lot. This location will only be allowed if agreed to by the owners of each lot and that agreement is recorded as a shared driveway easement on each survey plat.

(c) *Parking spaces.*

(1) Single-family detached and semi-detached dwellings and rowhouse dwellings are allowed a paved parking space. This parking space may not be located in the required front or corner-side yard. In addition, no parking space may be located forward of the front building line.

(2) No parking space may exceed 18 feet in depth, as measured from the property line or right-of-way.

(3) The maximum impervious surface requirement for a lot may not be exceeded to accommodate a parking space.

(Ord. 16-581; Ord. 17-015.)

§ 16-405. Curb cuts.

(a) *Permit required.*

(1) Curb cuts for driveways require a curb-cut permit from the Department of Transportation, subject to review by the Department of Planning.

(2) No person may construct, widen, remove, or alter any driveway or curb cut without a permit issued by the Department of Transportation.

(b) *Considerations.*

(1) For residential-, commercial-, and industrial-zoned properties, curb cuts will be considered for the following situations:

(i) for access to parking garages (principal use);

(ii) for access to parking lots with more than 5 parking spaces;

(iii) for dwelling units without rear or side access, where no on-street parking is allowed along the front lot line;

(iv) for dwelling units that are capable of securing side street access to a garage or parking space; and

(v) in cases where the proposed private parking will provide a net gain over the displaced amount of on-street parking.

(2) Existing curb cuts or abandoned curb cuts do not guarantee approval for reuse unless there is an existing permit. In addition, existing curb cuts lawfully established in the immediate vicinity do not guarantee approval of any given request.

(3) The City reserves the right to deny a curb cut request regardless of the availability or unavailability of side and rear access.

(Ord. 16-581; Ord. 17-015.)

§ 16-406. Drive-through facility stacking spaces.

(a) *Number required.*

Every drive-through facility must provide at least 4 stacking spaces per bay or lane, unless otherwise required by *Table 16-406: Required Off-Street Parking* or otherwise by this Code.

(b) *Standards.*

Stacking spaces provided for drive-through uses must:

(1) be at least 9 feet wide, as measured from the outermost point of any service window to the edge of the drive aisle, and at least 18 feet long;

(2) be placed in a single line behind the drive-through facility;

(3) be located so that, when in use, they do not obstruct ingress or egress to the site and do not obstruct access to required parking or loading spaces;

(4) begin behind the vehicle parked at a last point of service, such as a window or car wash bay; and

(5) comply with any additional standards in § 14-311 {"Drive-through facilities"}.

(Ord. 16-581.)

§ 16-407. Surfacing.

(a) *In general.*

Unless otherwise permitted by this title or in subsections (b) or (c) of this section, parking spaces must be surfaced and maintained with a dustless all-weather material in accordance with the Baltimore City Building Code. Semi-pervious materials, such as grass-crete and pervious pavers, may also be used.

(b) *Parallel paved wheel strips.*

For single-family detached and semi-detached dwellings, a parking space may consist of 2 parallel paved parking strips, each of which is at least 18 inches wide and at least 18 feet long.

(c) *Semi-pervious materials.*

For single-family detached, semi-detached, and rowhouse dwellings, driveways may be constructed of semi-pervious materials, such as grass-crete, pervious pavers, and gravel.

(Ord. 16-581.)

§ 16-408. Pavement markings.

(a) *Multi-space area.*

Off-street parking areas of 5 or more spaces must delineate the parking spaces with paint or other permanent materials, which must be maintained in clearly visible condition.

(b) *Accessible parking spaces.*

Accessible parking spaces must be identified with the appropriate sign and must be visible at all times of the year.

(Ord. 16-581.)

§ 16-409. Curbing and wheel stops.

Wheel stops or curbing must be provided to prevent vehicles from damaging or encroaching on an adjacent parking or loading space, sidewalk, landscaped area, or parking lot island, fence, wall, or building. Curbing must be at least 6 inches in height, in accordance with Building Code § 3112.5 {"Curbs or bumpers"}.

(Ord. 16-581.)

§ 16-410. Lighting.

Parking lot lighting must comply with § 15-505 {"Exterior lighting"} of this Code. Illumination of an off-street parking area must be arranged so as to deflect light away from adjacent properties and streets.

(Ord. 16-581.)

SUBTITLE 5
PERMITTED PARKING ALTERNATIVES

§ 16-501. Collective and alternating shared parking.

(a) *Collective parking.*

(1) Off-street parking spaces for separate uses may be provided collectively if the aggregate number of spaces provided is not less than the sum of the spaces required in *Table 16-501: Collective Parking Calculation*. *Table 16-501* is applied as provided in this subsection.

(2) The required number of spaces for each use is calculated according to *Table 16-406: Required Off-Street Parking*.

(3) The required number of spaces for each use is then applied to the percentages shown in *Table 16-501* for each applicable time frame and the appropriate land use category, to determine the number of required spaces.

(4) The number of spaces are added for all land uses within each time frame, and the highest sum total in a time frame is the required number of spaces.

(b) *Alternately shared parking arrangements*.

(1) An off-street parking facility may be alternately shared between 2 or more uses, as long as the use of that facility by each user does not occur at the same time. Alternately shared parking arrangements must meet the conditions set forth in this subsection.

(2) The Zoning Administrator must confirm that the use of the facility by each user does not take place at the same hours during the same days of the week.

(3) The users of the alternating shared parking arrangement must record an agreement to share the parking facilities, subject to approval by the Zoning Administrator. A copy of the recorded agreement must be submitted to the Zoning Administrator.

(4) The off-site parking facilities must be located within 600 feet of the lot line of the use or structure served.

(5) Any subsequent change in ownership or use must require proof that the minimum parking requirements, per this title, have been met for each use. The owner of an existing building or use has 180 days within which to accommodate required off-street parking or to apply for a variance. If the owner is unable to accommodate the parking or apply for a variance, then the use permit is revoked with respect to the use for which the separate parking was required. The use permit will be reinstated when all applicable provisions of this title are complied with. As an alternative to a variance, a new shared parking agreement may be arranged in accordance with this subsection.

(Ord. 16-581.)

§ 16-502. Land-banked future parking.

(a) *In general.*

Land banking allows for designating a portion of land on a site that would be required for parking to be held and preserved as open space, rather than constructed as parking. The Department of Planning may permit land banking of up to 25% of the required parking spaces through the site plan review process, subject to the requirements of this section.

(b) *Prerequisites.*

(1) *Reduced current parking needs.*

The applicant must provide sufficient evidence that supports the reduced parking needs.

(2) *Area suitable for future parking.*

The area proposed for land banking of parking spaces must be an area suitable for parking at a future time.

(c) *Exclusive use for land-banking.*

The land-banked area may not be used for any other use and must be part of the same lot and all under the same ownership.

(d) *Designation on site plan*

As part of the site plan review process, the applicant must show the area to be banked on the site plan and marked as "Land-Banked Future Parking".

(e) *Conversion to parking spaces.*

The Zoning Administrator, on the basis of increased parking demand for the use, may require the conversion of all or part of the land-banked area to off-street parking spaces.
(Ord. 16-581.)

§§ 16-503 and 16-504. *{Reserved}*

§ 16-505. Cross-access easements.

(a) *Circulation between sites encouraged.*

Adjacent commercial uses that possess dedicated parking areas are encouraged to provide a cross-access drive to allow circulation between sites. For new commercial and office uses, a system of joint-use driveways and cross-access easements is encouraged where feasible. Commercial property owners are encouraged to pursue cross-access with neighboring property owners when site plan review is requested. If cross-access will be provided, the Zoning Administrator may require that the property owner provide proof that adjacent property owners have been contacted in writing regarding the provision of cross-access.

(b) *Design requirements.*

Joint-use driveways and cross-access easements must incorporate the following:

(1) a minimum width of 24 feet to ensure 2-way travel aisles to accommodate automobiles, service vehicles and loading vehicles;

(2) bump-outs and other design features to make it visually obvious that the abutting properties are tied together; and

(3) a unified access and circulation plan for coordinated or shared-parking areas.

(c) *Easement requirements.*

Property owners who establish cross-access easements under this section must:

(1) record an easement that allows cross-access to and from properties served by the joint-use driveways and cross-access easement;

(2) record an easement to the effect that remaining access rights along the roadway will be dedicated to the City, and that any pre-existing driveways will be closed and eliminated after construction of the joint-use driveway; and

(3) record a joint maintenance agreement that defines the maintenance responsibilities of each property owner.

(Ord. 16-581.)

SUBTITLE 6
REQUIRED OFF-STREET PARKING

§ 16-601. Exemptions from requirements.

(a) *In general.*

The following districts and uses are allowed the following exemptions from the off-street parking requirements of *Table 16-406: Required Off-Street Parking*. These do not include exemptions from required bicycle parking.

(b) *Exemptions within certain districts***.**

(1) The C-1, C-1-E, C-1-VC, and C-5 Districts and all non-residential uses in the R-MU and D-MU Overlay Districts are exempt from parking requirements.

(2) (i) In the PC Subdistricts, the following uses are exempt from the off-street parking requirements of *Table 16-406: Required Off-Street Parking*:

(A) open-space uses (except for recreational marinas); and

(B) commercial uses with a gross floor area of less than 25,000 square feet.

(ii) The commercial-use exemption applies to any commercial use with a gross floor area of less than 25,000 square feet, even if there are other commercial uses located on the same lot.

(c) *Square footage exemption for C-2.*

(1) The first 2,500 square feet of gross floor area for commercial uses in the C-2 District are exempt from the parking requirements of *Table 16-406*.

(2) Those commercial uses 2,500 square feet or less in gross floor area located within a multi-tenant configuration (e.g., a shopping center) are not eligible for this exemption and must provide the required parking.

(d) *Rowhouse dwelling.*

For a rowhouse dwelling that is placed, constructed, or reconstructed in an existing row of attached or formerly attached rowhouse dwellings, no off-street parking spaces need be provided if any of the following circumstances are met:

(1) no off-street parking space existed for the previous dwelling;

(2) the lot adjoins a street that is at least 34 feet wide;

(3) the lot is less than 85 feet deep; or

(4) regardless of the depth of the lot or the width of the street, the alley adjoining the dwelling is less than 10 feet wide.

(e) *Neighborhood commercial establishment.*

Where a neighborhood commercial establishment is permitted by this Code, that use is exempt from parking requirements.

(f) *Structures over 50 years old, etc.*

Structures over 50 years old or structures that have received an historic tax credit are exempt from the parking requirements, subject to review and approval by the Director of Planning, if they have not historically provided parking and they lack sufficient space on the lot to accommodate parking. However, any conversions of rowhouse dwellings (Title 9, Subtitle 7) existing as of June 5, 2017, must provide additional parking spaces for the additional dwelling units required by this Code.

(Ord. 16-581; Ord. 17-015.)

§ 16-602. Required off-street parking.

(a) *In general.*

The minimum number of off-street parking spaces to be provided for the designated uses is as in *Table 16-406: Required Off-Street Parking*. *Table 16-406* lists parking requirements for the generic uses listed within the districts. In some cases, uses that are considered part of a generic use category are listed with specified parking requirements. These specific uses are listed only for the purposes of this title and do not indicate whether the uses are permitted or conditional uses within any district. Certain generic uses listed within the districts do not have parking requirements. These types of uses are not listed in *Table 16-406.*

(b) *Reductions – Affordable housing.*

No more than 1 parking space need be provided for every 2 dwelling units in dwellings that are erected or rehabilitated subject to a restriction that the units be leased to residents with incomes at or below 60% of the Area Median Income, with that restriction being for a term of not less than 15 years from the date of the issuance of a use permit and recorded in the Land Records of Baltimore City. The Housing Commissioner must verify, by letter to the Planning Director and the Zoning Administrator, the recordation, term, and tenor of the restriction.

(c) *Reductions – Small dwellings.*

No more than 0.5 parking spaces need be provided for every dwelling unit that is 500 square feet or smaller.

(d) *Reductions – Housing for elderly.*

For units designed for occupancy by the elderly in a government-assisted private or public housing dwelling:

(1) in the R-5 and R-6 Districts, no more than 1 parking space need be provided for every 2 units; and

(2) in the R-7, R-8, R-9, and R-10 Districts, no more than 1 parking space need be provided for every 4 units.

(e) *Compact spaces.*

Compact spaces may be substituted for required parking spaces subject to site plan review and approval. The use of compact spaces does not reduce or increase the amount of parking required by *Table 16-406* and this Code.

(Ord. 16-581; Ord. 17-015.)

SUBTITLE 7
REQUIRED BICYCLE PARKING

§ 16-701. Design standards for all bicycle parking.

(a) *Space size.*

Required bicycle spaces must be at least 2 feet wide by 6 feet long, with a minimum overhead vertical clearance of 7 feet 6 inches, except for approved bike lockers and other enclosures, which may be shorter in height.

(b) *Bicycles only.*

All bicycle parking spaces required by this title must be used solely for the parking of bicycles.

(c) *Required signage.*

If required bicycle parking facilities are not visible from the street, signs must be posted to indicate their location.

(d) *Paving, draining, and lighting.*

Areas used for required bicycle parking must be paved and drained to be reasonably free of mud, dust, and standing water, and must be well-lighted.

(e) *Parking convenience and security.*

Bicycle parking must be designed so that bicycles may be securely locked without undue inconvenience and will be reasonably safeguarded from intentional or accidental damage.

(f) *Parking at ground level or by accessible elevator*.

Bicycle parking must be provided at ground level unless an elevator is easily accessible to an approved bicycle storage area.

(g) *Minimal interference with pedestrians.*

Bicycle parking must be positioned so as to minimize interference with pedestrian movements.

(h) *Lockers.*

If required bicycle parking is provided in lockers, the lockers must be:

(1) lockable;.

(2) capable of fully enclosing the bicycle;

(3) securely anchored;

(4) constructed from a strong, weather-resistant, and low- to no-maintenance material;

(5) clearly labeled as bicycle parking;

(6) constructed with doors that open at least 90 degrees to allow easy loading and unloading;

(7) posted with information about how to use bicycle lockers (user-provided locks, leasing, sign-up system, smart cards, etc.) on or near the lockers; and

(8) if the lockers are stacked on top of each other, equipped with a wheel guide tray or other mechanism to assist the user with lifting the bicycle.

(i) *Floor racks.*

(1) Required bicycle parking may be provided in floor racks.

(2) Wall and ceiling rack designs are subject to the approval of the Director of Planning as part of site plan review.

(3) If required bicycle parking is provided in racks, the racks must meet the following standards:

(i) the bicycle frame and 1 wheel must be lockable to the rack with a high security, U-shaped shackle lock if both wheels are left on the bicycle;

(ii) a bicycle 6-feet long can be securely held with its frame supported so that the bicycle cannot be pushed or fall in a manner that will damage the bicycle in any way;

(iii) the racks must support a bicycle in at least 2 places, preventing it from falling over; and

(iv) the racks must be solidly constructed, resistant to rust and corrosion, d resistant to hammers and saws, and anchored so that they cannot be easily removed.

(j) *Parking and maneuvering areas.*

Bicycle parking and maneuvering areas for bicycling parking must meet the following standards:

(1) each required bicycle parking space must be accessible without moving another bicycle;

(2) there must be an aisle at least 5 feet wide behind all required bicycle parking to allow room for bicycle maneuvering; and

(3) if the parking area adjoins a sidewalk, the maneuvering area may extend into the right-of-way.

(k) *Covered parking.*

(1) Covered bicycle parking may be provided inside buildings, under roof overhangs or awnings, in bicycle lockers, or within or under other structures.

(2) If required bicycle parking is to be covered and is not within a building or locker, the cover must be:

(i) permanent;

(ii) designed to protect the bicycle from rainfall; and

(iii) at least 7 feet and 6 inches above the floor or ground.

(l) *Allocation of short- and long-term spaces.*

All required bicycle parking spaces must be made available to the public as follows:

(1) required short-term bicycle parking spaces must be available for shoppers, customers, messengers, and other visitors to the site;

(2) required long-term bicycle parking spaces must be available for employees, students, residents, commuters, and others who remain at the site for several hours.

(m) *Alternate designs.*

Alternate designs for bicycle parking may be approved by the Director of Planning as part of site plan review.

(Ord. 16-581; Ord. 17-015.)

§ 16-702. Location.

(a) *In general.*

(1) All required bicycle spaces must be located on the same lot as the use served.

(2) However, required bicycle spaces may be constructed in the public right-of-way, subject to obtaining a minor privilege permit.

(b) *Dwellings, dormitories, etc.*

(1) Required long-term bicycle parking for residents of dwellings, dormitories, fraternities, or sororities must be provided in garages, storage rooms and other resident-accessible, indoor, secure areas.

(2) Space within dwelling units or on balconies may not be counted toward satisfying bicycle parking requirements.

(Ord. 16-581.)

§ 16-703. Short-term bicycle parking standards.

Short-term bicycle parking must be:

(1) outside a building;

(2) at the same grade as the sidewalk or at a location that can be reached by an accessible route; and

(3) within the following distances of the main entrance:

(i) for a building with 1 main entrance, the bicycle parking must be within 50 feet of that entrance, as measured along the most direct pedestrian access route;

(ii) for a building with more than 1 main entrance, the bicycle parking must be along all facades with a main entrance, and within 50 feet of at least 1 main entrance on each facade that has a main entrance, as measured along the most direct pedestrian access route;

(iii) for a site that has more than 1 primary building, but is not an institutional campus, the bicycle parking must be within 50 feet of a main entrance, as measured along the most direct pedestrian access route and distributed to serve all primary buildings; and

(iv) on an institutional campus with more than 1 building or main entrance, the bicycle parking must be either:

(A) within 50 feet of a main entrance, as measured along the most direct pedestrian access route; and

(B) if the short-term bicycle parking is more than 50 feet from a main entrance, it must be in a common bicycle parking location along a pedestrian access route.

(Ord. 16-581.)

§ 16-704. Long-term bicycle parking standards.

Long-term bicycle parking must be:

(1) located:

(i) on the site; or

(ii) in an area where the closest point is within 300 feet of the site.

(2) located either at ground level, on the ground floor of a building, or easily accessible by elevator.

(3) covered; *{and}*

(4) in at least 1 of the following locations, to provide security:

(i) in a locked room;

(ii) in an area that is enclosed by a fence, either 8 feet high or from floor to ceiling, with a locked gate;

(iii) within view of an attendant or security guard;

(iv) in an area that is monitored by a security camera; or

(v) in an area that is visible from employee work areas.

(Ord. 16-581.)

§ 16-705. Required number of bicycle spaces.

(a) *In general.*

(1) Bicycle parking spaces must be provided as indicated in *Table 16-705: Required Bicycle Spaces*.

(2) No bicycle parking is required for uses not listed in *Table 16-705*.

(3) Structures under 2,500 square feet in gross floor area are exempt from bicycle parking requirements.

(b) *Minimum spaces.*

In all cases where only 1 of either or both a long-term or short-term bicycle parking space would be required by a *Table 16-705* calculation, a minimum of 2 long-term or short-term spaces, as the case may be, must be provided.

(C) *Reduction after 1st 50 spaces.*

After the first 50 bicycle parking spaces are provided, additional bicycle parking spaces required are at one-half of the space-per-unit listed.

(d) *Partial deferral of spaces.*

If the expected need for bicycle parking for a particular use is uncertain due to unknown or unusual operating characteristics of the use, the Director of Planning may authorize the deferral of up to 50% of the bicycle parking spaces. Land area required for deferred bicycle parking spaces must be maintained in reserve.

(e) *Motor vehicle parking offset.*

(1) For every 12 bicycle parking spaces that meet the short- or long-term bicycle parking standards, as set forth in *Table 16-705 {"Required Bicycle Spaces"}*, the motor vehicle parking required by this title may be reduced by 1 space.

(2) Existing parking may be converted to take advantage of this provision.
(Ord. 16-581; Ord. 17-015.)

SUBTITLE 8
ADDITIONAL VEHICLE STORAGE REQUIREMENTS

§ 16-801. Commercial vehicles in residential areas.

(a) *In general.*

The following restrictions apply to the storage or parking of commercial vehicles on private property that is for residential use or that is in a block predominantly zoned for residential use.

(b) *Vehicles permitted to park overnight.*

Only standard-sized, passenger vehicles including, but not limited to, automobiles, passenger size livery vehicles, vans, sports utility vehicles (SUVs), and pick-up trucks are permitted to be stored or parked outdoors overnight on private property that is zoned for residential use or that is in a block predominantly zoned for residential use.

(c) *Vehicle prohibited from parking overnight.*

All other commercial vehicles including, but not limited to, semi-truck tractor units, with or without attached trailers, commercial trailers, buses, limousines (excluding passenger size livery vehicles), tow trucks, or construction vehicles, are prohibited from being stored or parked outside overnight on private property that is zoned for residential use or that is in a block predominantly zoned for residential use.

(Ord. 16-581.)

§ 16-802. Parking of recreational vehicles.

(a) *In general.*

The parking or storage of recreational vehicles or similar camping equipment must meet the following conditions.

(b) *48-hour limit in street or driveway of residential district.*

No recreational vehicle or trailer licensed to transport recreational vehicles or equipment may be parked in the public right-of-way in or in the driveway of a residential district for more than 48 hours.

(c) *Locations for parking or storage.*

If the recreational vehicle is not stored in a fully enclosed structure, it must be parked or stored to the rear of the front building line of the lot and located at least 3 feet from the side and rear lot lines. This requirement does not apply to recreational vehicles offered for sale in an approved outdoor sales and display area of a recreational vehicle dealership. Temporary storage tents for recreational vehicles are not considered a fully enclosed structure.

(d) *Use as dwelling, etc., prohibited.*

No recreational vehicle may be used for living, sleeping, or housekeeping purposes. The vehicle may not have fixed connections to electricity, water, gas, or sanitary sewer facilities.

(e) *Maintenance and current registration required.*

All recreational vehicles must be maintained in mobile condition. No recreational vehicle may be parked or stored in a manner that creates a dangerous or unsafe condition on the lot where parked or stored. Parking or storage in a way that the recreational vehicle, whether loaded or not, might tip or roll is considered a dangerous and unsafe condition. The recreational vehicle equipment must be kept in good repair and carry a current year's license and registration.

(Ord. 16-581.)

§ 16-803. Storage, etc., of abandoned, etc., vehicles.

(a) *Definitions.*

(1) *In general.*

In this section, the following terms have the meanings indicated.

(2) *Derelict vehicle.*

"Derelict vehicle" means a vehicle that exhibits a defect, damage, or deterioration sufficient to preclude proper operation on the highway.

(3) *Unlicensed vehicle.*

"Unlicensed vehicle" means:

(i) an unregistered vehicle; or

(ii) a vehicle on which current registration tags are not displayed.

(b) *Prohibited use.*

Outdoor storage or maintenance of abandoned, derelict, or unlicensed vehicles is prohibited in all districts.

(Ord. 16-581.)

SUBTITLE 9
OFF-STREET LOADING REQUIREMENTS

§ 16-901. Design of off-street loading spaces.

(a) *Location.*

All off-street loading spaces must be located on the same lot as the building or use served. No off-street loading space may project into a public right-of-way. No off-street loading space may be located in a front yard.

(b) *Dimensions*

(1) All required off-street loading spaces must be at least 12 feet wide and 35 feet long, exclusive of aisle and maneuvering space, and must have a vertical clearance of at least 14 feet. However, a larger loading space may be required through site plan review.

(2) All structures that, on June 5, 2017, maintain loading spaces that do not comply with the dimensions required by this section are considered to be legally conforming in terms of loading space dimensions. If new loading spaces are constructed, those spaces must match the dimensions of the existing loading spaces rather than those of this section.

(c) *Surfacing.*

All off-street loading spaces must be paved with a durable, all-weather material, such as concrete or asphalt. Semi-pervious materials may also be used, subject to the approval of the Department of Transportation and verification that the materials can support the weight of vehicles and their loads.

(d) *Drainage and maintenance.*

(1) Off-street loading facilities must be drained to eliminate standing water and prevent damage to adjoining property or public streets.

(2) Off-street loading areas must be maintained in a clean, orderly, and dust-free condition.

(e) *Access control and signage.*

Each off-street loading space must be designed with adequate means of vehicular access to a street that is at least 15 feet wide in a manner that will minimize interference with traffic movement.

(f) *Lighting.*

Loading facility lighting must be in accordance with § 15-505 {"Exterior lighting"} of this Code. Illumination of an off-street loading facility must be arranged so as to deflect the direct rays of light away from adjacent properties and streets.

(g) *Landscaping and screening.*

All loading facilities must be landscaped and screened from public view in accordance with the requirements of the Baltimore City Landscape Manual.

(Ord. 16-581; Ord. 17-015.)

§ 16-902. Required off-street loading spaces.

(a) *When required.*

(1) Off-street loading spaces must be provided in accordance with *Table 16-902: Off-Street Loading Requirements* for a building, structure, or use that requires the receipt or distribution of materials or merchandise by trucks or other vehicles.

(2) In the case of multi-tenant buildings or mixed-use developments, required loading spaces are calculated on the basis of each individual tenant. For example, if only 1 commercial tenant of a multi-tenant building is over 10,000 square feet, only one 1 loading space is required; if all tenants are 10,000 square feet or less, no loading is required.

(b) *Maximum requirement.*

In no case is a structure required to provide more than 5 loading spaces.

(c) *Preexisting structures exempt.*

All structures that were constructed before June 5, 2017, without on-site loading spaces are considered to be legally conforming in terms of loading space requirements. No new loading spaces are required to be constructed.

(Ord. 16-581; Ord. 17-015.)

TITLE 17
SIGNS

SUBTITLE 1
PURPOSE OF TITLE; DEFINITIONS

§ 17-101. Purpose.

(a) *In general.*

Signs serve an important function, and reasonable and adequate display of signs is therefore allowed under this title.

(b) *Need to regulate.*

At the same time, this title recognizes that a definite need exists to regulate the display of signs. Therefore this title establishes limitations and standards consistent with the character of the various districts and the uses and activities in those districts.

(c) *Limitations and standards..*

These limitations and standards are intended to encourage sound practices with respect to size, type, and placement of signs for the purpose of:

(1) safeguarding and enhancing properties in residential, commercial and industrial areas;

(2) providing an environment that will promote the growth and development of business in the City;

(3) protecting public investment in public buildings, open spaces, and thoroughfares;

(4) reducing hazards to motorists and pedestrians on the public ways; and

(5) promoting the public health, safety, and welfare.

(Ord. 16-581.)

§ 17-102. Definitions.

(a) *In general.*

In this title, the following terms have the meanings indicated.

(b) A-frame sign.

"A-frame sign" means a sign, ordinarily in the shape of the letter "A," or some variation of it, that is displayed on the ground, not permanently attached, and usually 2-sided.

(c) *Animated sign.*

(1) *In general.*

"Animated sign" means a sign that uses movement or change of lighting to depict action or to create a special effect or scene.

(2) *Exclusions.*

"Animated sign" does not include an electronic message sign.

(d) *Awning sign.*

"Awning sign" means a sign that is printed or displayed on an awning.

(e) *Banner sign.*

(1) *In general.*

"Banner sign" means a sign that is printed or displayed on cloth or other flexible material with or without frames.

(2) *Types.*

Banner signs may be permanent or temporary in nature. A permanent banner sign is a banner sign displayed for more than 30 days as a permanent means of identifying an establishment.

(f) *Canopy sign.*

"Canopy sign" means a sign that is printed or displayed on a canopy.

(g) *Changeable copy sign.*

"Changeable copy sign" means a permanent sign that contains a part that allows copy to be changed manually.

(h) *Construction sign.*

"Construction sign" means a temporary sign that identifies an architect, contractor, subcontractor, or material supplier participating in construction on the property on which the sign is located and may identify the proposed use for the property.

(i) *Electronic display screen sign.*

(1) *In general.*

"Electronic display screen sign" means a sign, or portion of a sign, that displays an electronic image or video, which may or may not include text.

(2) *Inclusions.*

"Electronic display screen sign" includes television screens, plasma screens, digital screens, flat screens, LED screens, video boards, and holographic displays.

(j) *Electronic message sign.*

(1) *In general.*

"Electronic message sign" means a sign, or portion of a sign, that uses changing lights to form a message or messages in text form where the sequence of messages and the rate of change is electronically programmed and can be modified by electronic processes.

(2) *Exclusions.*

"Electronic message sign" does not include time-temperature signs.

(k) *Flashing sign.*

(1) *In general.*

"Flashing sign" means a sign that contains an intermittent or sequential flashing light source used primarily to attract attention.

(2) *Exclusions.*

"Flashing sign" does not include an electronic message sign.

(l) *Freestanding sign.*

(1) *In general.*

"Freestanding sign" sign means a sign that is placed on or supported by the ground, independent of the principal structure on the lot.

(2) *Types.*

Freestanding signs may be either pole or monument signs.

(m) *Marquee sign.*

"Marquee sign" means a sign that is mounted on a permanent roof-like structure constructed of durable material, and extending from the wall of a structure with no supports extending to the ground.

(n) *Menu board sign.*

"Menu board sign" means a device that lists items for sale at an establishment with drive-through facilities.

(o) *Moving sign.*

(1) *In general.*

"Moving sign" means a sign that, in whole or in part, rotates, elevates, or in any way alters position or geometry.

(2) *Exclusions.*

"Moving sign" does not include a clock.

(p) *Nameplate.*

"Nameplate" means a sign that is affixed flat against a wall of a building that designates only the name or the name and profession of who resides or occupies space in the building.

(q) *Nonconforming sign*.

"Nonconforming sign" means a sign that was lawfully erected and maintained but does not now conform to the requirements of this Code.

(r) *Non-commercial or political sign.*

"Non-commercial or political sign" means a sign advocating action on a public issue or a candidate for public office.

(s) *Portable sign.*

(1) *In general.*

"Portable sign" means a sign whose principal supporting structure is intended, by design and construction, to rest on the ground for support and may be easily moved or relocated for reuse.

(2) *Inclusions.*

"Portable sign" includes a sign mounted on a trailer, wheeled carrier, or other non-motorized mobile structure, with wheels or with wheels removed.

(3) *Exclusions.*

"Portable sign" does not include an A-frame sign.

(t) *Projecting sign.*

"Projecting sign" means a sign that is attached to a building or other structure and extends beyond the surface of the building or structure to which it is attached.

(u) *Real estate sign.*

(1) *In general.*

"Real estate sign" means a sign that advertises the property on which it is located as being for rent, lease, or sale.

(2) *Inclusions.*

"Real estate sign" includes a sign advertising an open house.

(v) *Roof sign.*

"Roof sign" means a sign that is wholly erected, constructed, or maintained above the roof structure or parapet of any building and that has its principal support attached to the roof structure.

(w) *Under-awning sign.*

"Under-awning sign" means a sign that is attached to and mounted under an awning.

(x) *Wall sign.*

(1) *In general.*

"Wall sign" means a sign that is mounted flat against or painted on a wall, and projects no more than 12 inches from the wall of a structure with the exposed face of the sign in a plane parallel to the face of the wall.

(2) *Exclusions.*

"Wall sign" does not include a window sign.

(y) *Window sign.*

(1) *In general.*

"Window sign" means a sign that is attached to, placed on, or printed on the interior or exterior of a window or door of a building, or that is displayed within 12 inches of a window intended for viewing from the exterior of the building.

(2) *Types.*

Window signs may be either permanent or temporary.

(Ord. 16-581.)

SUBTITLE 2
PLACEMENT, DESIGN, AND CONSTRUCTION

§ 17-201. Location restrictions.

(a) *As in Building Code.*

All signs must comply with the location restrictions of the Baltimore City Building Code, Appendix H {"Signs"}.

(b) *Covering window, door, etc., prohibited.*

No sign mounted on the exterior of a building may cover any windows, doors, or architectural features.

(Ord. 16-581.)

§ 17-202. General design and construction.

(a) *As in Building, Fire, and Related Codes.*

The structural design and construction of signs, including their supports, must comply with the applicable requirements of the City Building, Fire, and Related Codes Article.

(b) *Supports and braces.*

(1) Supports and braces must be an integral part of the sign design.

(2) Supports and braces must be hidden from public view to the extent technically feasible, unless they are intended as a decorative part of the sign design.

(c) *Lettering.*

All letters, figures, characters, or representations in cut-out or irregular form, maintained in conjunction with, attached to, or superimposed on any sign must be safely and securely built or attached to the sign structure.

(d) *Illumination.*

(1) Unless otherwise provided in this title, all permanent signs are subject to the regulations of this subsection.

(2) Goose-neck fixtures and indirect spotlights are allowed on permanent freestanding signs, projecting signs, and wall signs.

(3) All exterior lighting intended to illuminate a sign must concentrate the illumination on the area of the sign so as to prevent glare on the street or adjacent property.

(4) (i) All sign illumination must be designed, located, shielded, and directed so as to prevent:

(A) casting glare or direct light on adjacent publicly dedicated roadways and surrounding properties; and

(B) distraction of motorists or pedestrians in the public right-of-way.

(ii) This paragraph (4) does not apply to digital billboards.

(5) Permanent freestanding signs, projecting signs, window signs, and wall signs may be internally illuminated.

(6) For the purposes of this title, an indirectly illuminated sign is a sign illuminated with a light that is directed primarily toward the sign and shielded so that no direct rays from the light are visible anywhere other than on the lot where the sign is located.

(Ord. 16-581.)

§ 17-203. Sign and premises maintenance.

(a) *In general.*

(1) All signs and the premises surrounding them must be maintained in a clean, sanitary, and inoffensive condition, free and clear of all noxious substances, rubbish, and weeds.

(2) All unused sign hardware or wiring that is visible from the street must be removed.

(b) *Enforcement.*

(1) If the Building Official finds that any sign or other advertising structure is unsafe or insecure, or is a menace to the public, or has been constructed or erected or is being maintained in violation of this title, the Building Official must give written notice to the sign permit holder and the property owner.

(2) If the sign permit holder or the property owner fails to cure the violation, the sign may be removed by the City at the expense of the sign permit holder or the property owner.

(3) The City may cause any sign or other advertising structure that is an immediate peril to individuals or property to be removed summarily and without notice.

(Ord. 16-581.)

SUBTITLE 3
SIGN DIMENSION MEASUREMENT METHODOLOGY

§ 17-301. In general.

(a) *Sign area.*

Sign area is measured as provided in §§ 17-302 through 17-305 of this subtitle.

(b) *Sign height.*

Sign height is measured as provided in § 17-306 of this subtitle.
(Ord. 16-581.)

§ 17-302. Sign area – General.

(a) *Signs on a background.*

(1) For signs on a background, the entire area of the framework or background of the sign is calculated as sign area, including any material or color forming the sign face or background used to differentiate the sign from the structure against which it is placed.

(2) Sign area does not include any framework or bracing, unless the framework or bracing is part of the message or sign face.

(b) *Freestanding letters or logos.*

(1) For signs consisting of freestanding letters or logos, the sign area is calculated as the total area of each square, circle, rectangle, triangle, or combination of these, that encompasses each individual letter or logo.

(2) Sign area does not include any supporting framework or bracing, unless the framework or bracing is part of the message or sign face.

(c) *Window sign on transparent film.*

Window signs printed on a transparent film and affixed to a windowpane are calculated by their individual letters or logos, as long as the portion of the transparent film around the perimeter of the individual letters or logos maintains the transparency of the window.
(Ord. 16-581.)

§ 17-303. Sign area – Supports and uprights excluded.

Necessary supports or uprights on which the sign is placed are not included in the computation.
(Ord. 16-581.)

§ 17-304. Sign area – Multi-faced signs.

(a) *In general.*

If a sign has 2 or more faces, the area of all faces is included in determining the area of the sign, except as specified in subsection (b) of this section.

(b) *Back-to-back within 2 feet.*

If 2 faces are placed back to back and are not more than 2 feet apart (excluding necessary supports or uprights), the area of the sign is taken as:

(1) the area of 1 face, if the 2 faces are of equal area; and.

(2) the area of the larger face, if the 2 faces are of unequal area.

(Ord. 16-581.)

§ 17-305. Sign area – Three-dimensional signs.

The sign area of a three-dimensional, free-form or sculptural (non-planar) sign is calculated as 50% of the sum of the area of the 4 vertical sides of the smallest cube that will encompass the sign.

(Ord. 16-581.)

§ 17-306. Sign height.

The height of a sign is determined by measuring the vertical distance from the uppermost point used to measure the area of a sign to the ground immediately below that point or to the level of the upper surface of the nearest curb of a street or alley, whichever measurement permits the greater elevation of the sign.

(Ord. 16-581.)

SUBTITLE 4
SIGN PERMIT AND SPECIAL DESIGNATIONS

§ 17-401. Building permit for signs required.

(a) *In general.*

Unless otherwise provided in this title, it is unlawful for any person to erect, relocate, or structurally alter any sign without first obtaining a sign permit from the Building Official.

(b) *Revocation.*

The Building Official may revoke a sign permit where there has been a violation of the provisions of this Code or misrepresentation of fact on the permit application.

(Ord. 16-581.)

§ 17-402. Classic signs.

(a) *Purpose.*

(1) Because the City recognizes that certain existing signs do not conform with this Code but are particularly unique or have historic value, including signs for products or businesses that are no longer located on-site, the classic sign designation process is established to designate certain signs as classic signs.

(2) Once designated, the classic sign is deemed to be conforming, and thus loses its nonconforming status, as long as:

(i) the sign is maintained in good condition;

(ii) its physical integrity remains intact; and

(iii) it is not moved to another location.

(b) *Exemption from standards.*

Classic signs are exempt from area, setback, height, lighting, movement, flashing, placement, type, content, and construction materials requirements of this Code.

(c) *Eligibility.*

(1) Any person or the City may apply for designation of an existing sign as a classic sign.

(2) To qualify for designation as a classic sign, the sign must:

(i) be at least 25 years old or a replica of an original sign where the combined age of the duplicate and original sign is at least 25 years;

(ii) possess unique physical design characteristics, such as configuration, message, color, texture, etc.; and

(iii) be of significance to the City, regardless of the use identified by the sign.

(3) A sign designated a classic sign may remain on the premises even if the original use or product to which the sign relates is no longer located on the premises.

(d) *Application.*

(1) An application for classic sign status must include plans for sign maintenance, renovation, or possible reconstruction.

(2) Application for classic sign status must be made to the Commission for Historical and Architectural Preservation.

(3) The Commission for Historical and Architectural Preservation must approve or deny the application.

(e) *Maintenance***.**

(1) The owner of a classic sign must ensure that the sign is not structurally dangerous, a fire hazard, an electrical shock hazard, or any other kind of hazard.

(2) Classic signs may be rebuilt if damaged.

(f) *Master list of classic signs.*

The Zoning Administrator must maintain a master list of all designated classic signs. *(Ord. 16-581.)*

SUBTITLE 5
EXEMPT SIGNS

§ 17-501. In general.

(a) *Exemption from permit requirements.*

The following activities and signs are exempt from sign permit requirements.

(b) *Illumination not permitted.*

No sign exempt by this subtitle may be illuminated unless specifically allowed by this subtitle.
(Ord. 16-581.)

§ 17-502. Activities exempt from permit.

The following activities are exempt from sign permit requirements:

(1) changing the advertising copy or message on an existing changeable copy sign, whether illuminated or non-illuminated;

(2) painting, repainting, cleaning, changing allowed items of information, or other normal maintenance and repair of a sign, not involving structural changes or changes in the electrical components of the sign;

(3) refacing an existing sign, unless located in an Historical and Architectural Preservation District or listed on a Landmark List: Exteriors or a Special List: Exteriors, in which case the proposed activity must be referred to the Commission for Historical and Architectural Preservation for approval; and

(4) classic signs, as described in § 17-402 {"Classic signs"} of this subtitle, may be exempt from additional activities, subject to regulations adopted by the Commission for Historical and Architectural Preservation.
(Ord. 16-581.)

§ 17-503. Banners (Temporary).

(a) *In general.*

Temporary banners are exempt from sign permit requirements, subject to the following regulations.

(b) *Non-residential or multi-family uses.*

Temporary banners are allowed for any non-residential use or multi-family dwelling.

(c) *Size.*

Temporary banners may not exceed 32 square feet in area.

(d) *1 Per lot.*

Only 1 temporary banner is allowed per lot.

(e) *Height.*

No temporary banner may be located higher than the roofline of the building to which it is attached or, if attached to a permanent sign, higher than that sign.

(f) *No right-of-way encroachment.*

No temporary banner may encroach into the public right-of-way.

(g) *Periods of display.*

(1) Temporary banners are limited to a display period of 30 days.

(2) Temporary banners are limited to 4 display periods per year, with at least 7 days between display periods.

(Ord. 16-581.)

§ 17-504. Bike-sharing stations, advertising signs on.

(a) *"Bike-sharing station" defined.*

In this section, "bike-sharing station" means an installation that consists of an automated payment and information kiosk, together with a mechanism for storing, releasing, and securing bicycles.

(b) *In general.*

Advertising signs on bike-sharing stations are allowed as provided in this section.

(c) *Limitations*.

(1) In all districts, these signs are subject to the following limitations and requirements.

(2) The sign display area must be integral to the design of the bike-sharing station.

(3) No sign may extend from the face of the bike-sharing station.

(4) No sign may extend above the top of the bike-sharing station.

(5) The advertising sign area may not exceed 16 square feet on each side. The sign may be double-sided. Informational signs, bike path information, and maps provided by the Department of Transportation are not included within this size limit. A community information panel is allowed and is not included within this size limit as long as it does not exceed 11" x 17" and is placed on the inside of the station.

(6) No sign may advertise alcoholic beverages or tobacco products.

(7) For a bike-sharing station that is in a public right-of-way, the station must have obtained a minor privilege permit.

(8) If located within a public park, the bike-sharing station and site must be approved by the Director of Recreation and Parks.

(9) The sign must otherwise comply with all applicable requirements of this title.

(Ord. 16-581.)

§ 17-505. Flags.

(a) *In general.*

Flags of nations or political subdivisions or of a patriotic, religious, philanthropic, civic, or educational organization are exempt from sign permit requirements, subject to the following regulations.

(b) *Residential districts.*

Within the residential or office-residential district:

(1) a maximum of 3 flagpoles is allowed per lot; and

(2) flagpole heights may not exceed the maximum height of the district or 35 feet, whichever is less.

(c) *Commercial "welcome", etc., flags.*

Standard-size flags of a commercial nature, identifying a generic type of business or displaying a "welcome", "open", or similar generic message, are limited to no more than 1 per establishment and must be affixed to the storefront of the establishment.

(Ord. 16-581.)

§ 17-506. Garage or yard sale signs.

(a) *In general.*

Temporary garage or yard sale signs are exempt from sign permit requirements, subject to the following regulations.

(b) *Size.*

Temporary residential garage or yard sale signs may not exceed 4 square feet in area.

(c) *Posting limitations.*

(1) Signs may not be posted more than 3 days before the event and must be removed within 24 hours after the event.

(2) Signs may not be posted in the public right-of-way or off-premises.
(Ord. 16-581.)

§ 17-507. Governmental signs.

(a) *In general.*

Governmental signs are exempt from sign permit requirements. These include traffic signs and traffic lights, railroad crossing signs, signs regulating vehicular or pedestrian traffic, signs of public service companies indicating danger or aids to service or safety, and signs designating or giving direction to streets, schools, historic sites, or public buildings.

(b) *Illumination.*

Governmental signs may be illuminated as needed.
(Ord. 16-581.)

§ 17-508. House number signs.

House number signs are exempt from sign permit requirements as long as they comply with City Code Article 26, Subtitle 6 {"Building Address Numbers"}.
(Ord. 16-581.)

§ 17-509. Memorial plaques, etc.

Memorial plaques, cornerstones, and historical tablets are exempt from sign permit requirements.
(Ord. 16-581.)

§ 17-510. Miscellaneous informational matter.

(a) *In general.*

Matter appearing on gasoline pumps, newspaper vending boxes and other vending machines, or automatic teller machines, or matter appearing on or adjacent to entry doors, such as "push", "pull", "open", or "closed", or matter appearing on display windows or doors are exempt from sign permit requirements.

(b) *Included in window sign area limits.*

However, this information is counted in the total window sign area limitations.
(Ord. 16-581.)

§ 17-511. Official public notices.

(a) *In general.*

Official public notices or notices posted by public officers in the performance of their duties are exempt from sign permit requirements.

(b) *Prompt removal.*

If related to a specific date, these signs must be removed within 14 days of that date.
(Ord. 16-581.)

§ 17-512. Parking regulation signs.

Parking lot or garage regulation signs, such as "No Parking" or "Unauthorized users will be towed", are exempt from sign permit requirements.
(Ord. 16-581.)

§ 17-513. Non-commercial or political signs.

(a) *In general.*

Temporary signs in connection with community development events, non-commercial health, art, safety, and welfare campaigns, and political signs, are exempt from sign permit requirements, subject to the following regulations.

(b) *Private property only.*

(1) These signs may only be posted on private property and only with the permission of the property owner.

(2) Posting on any public property is prohibited.

(c) *Prompt removal.*

The sponsoring organization must remove temporary signs in connection with community development events, non-commercial health, art, safety, and welfare campaigns promptly at the conclusion of the event or campaign.
(Ord. 16-581.)

§ 17-514. Real estate signs.

(a) *In general.*

Real estate signs are exempt from sign permit requirements, subject to the following regulations.

(b) *Residential and OR Districts – Multi-family (20 or more units) and non-residential buildings.*

(1) This subsection applies to real estate signs for multi-family dwellings (20 or more units) or for non-residential buildings in a Residential or Office-Residential District.

(2) 1 non-illuminated real estate sign is allowed.

(3) The sign may be erected only on the premises to which the sign relates.

(4) The sign may not exceed 16 square feet in area or 4 feet in height.

(5) If attached to a building, the sign may not extend above the roofline.

(6) The sign display is limited to no more than 7 days after the premises has been leased or title to the premises has transferred.

(c) *Residential and OR Districts – Single-Family, Rowhouse, and Multi-Family (19 or fewer units) and unimproved lots.*

(1) this subsection applies to real estate signs for single-family, rowhouse, or multi-family (19 or less units) dwellings or for unimproved lots in a Residential or Office-Residential District.

(2) 1 non-illuminated real estate sign is allowed for each street frontage of the lot.

(3) The sign may be erected only on the premises to which the sign relates.

(4) The sign may not exceed 6 square feet in area or 3 feet in height.

(5) The sign display is limited to no more than 7 days after the premises has been leased or title to the premises has transferred.

(d) *All other districts.*

(1) This subsection applies to real estate signs in all other districts.

(2) 1 non-illuminated real estate sign is allowed.

(3) The sign may be erected only on the premises to which the sign relates.

(4) The sign may not exceed 36 square feet in area or 8 feet in height.

(5) If attached to a building, the sign may not extend above the roofline.

(6) The sign display is limited to no more than 7 days after the premises has been leased or title to the premises has transferred. If a real estate sign advertises the leasing of multiple dwelling units or commercial spaces, that sign may be displayed until all units or spaces are leased. Once all units or spaces are leased, the sign must be removed no more than 7 days after leasing the last unit or space.

(Ord. 16-581.)

§ 17-515. Warning signs.

(a) *In general.*

Warning signs on private property, such as “No Trespassing” or “No Dumping,” are exempt from sign permit requirements, subject to the following regulations.

(b) *Area.*

These signs may not exceed 6 square feet in area.

(c) *Height; Setback.*

If mounted as a freestanding sign, the warning sign may not exceed 6 feet in height and must be setback at least 5 feet from a lot line.

(Ord. 16-581.)

§ 17-516. Window signs (Temporary).

(a) *In general.*

Except as provided in § 17-602 {"Alcoholic beverage and cigarette advertising signs"} of this title, temporary signs affixed to the inside of a window or mounted within 12 inches of a window are exempt from sign permit requirements, as long as the total of all window signs, whether permanent or temporary but not counting window displays, occupies no more than 25% of the total window area.

(b) *Non-residential uses only.*

Except as otherwise provided in this Code, temporary window signs are only allowed for non-residential uses in non-residential districts.

(c) *Period of display.*

(1) Temporary signs are limited to a display period of 30 days.

(2) Temporary signs are limited to 4 display periods per year, with at least 7 days between display periods.

(Ord. 16-581.)

§ 17-517. "Sponsor-a-road" signs.

The sign permit and other requirements of this title do not apply to signs posted by or on behalf of the City in the right-of-way of a public street or road to acknowledge business entities or other persons sponsoring a street-maintenance-services program.

(Ord. 16-581.)

SUBTITLE 6
PROHIBITED SIGNS

§ 17-601. Prohibited signs.

The following types of permanent and temporary signs are prohibited.
(Ord. 16-581.)

§ 17-602. Alcoholic beverage and cigarette advertising signs.

(a) *General prohibition.*

No person may place any sign, poster, placard, device, graphic display, or other item that advertises alcoholic beverages or cigarettes in any publicly visible location, including any outdoor billboard, side of a building, or freestanding signboard.

(b) *Exceptions.*

(1) *"Licensed premises" defined.*

In this subsection, "licensed premises" means:

(i) as to alcoholic beverage signs, a premises that operates under an alcoholic beverages license or permit issued under State Code Article 2B; and

(ii) as to the cigarette signs, a premises that operates under a cigarette business license issued under Title 16 of the State Business Regulation Article;

(2) This section does not apply to:

(i) the placement of signs, including advertisements:

(A) inside a licensed premises;

(B) on commercial vehicles used for transporting alcoholic beverages or cigarettes, as the case may be; or

(C) in conjunction with a temporary or 1-day alcoholic beverages license granted by the Board of License Commissioners;

(ii) 1 sign only per street frontage, whether a window or wall sign, whether permanent or temporary, that contains the name or slogan of the licensed premises and has been placed there for the purpose of identifying the licensed premises, provided that the total of each sign, whether permanent or temporary, including window displays, covers no more than 15% of the window or exterior wall area on which displayed. All other window and exterior wall signs and displays are prohibited. For purposes of this subsection, 1 window is comprised of all the glass panes within the main frame of the window area. The maximum 15% coverage applies to the total area within the external window frame.

(iii) any sign on a Maryland Transit Authority vehicle or on a taxicab; and

(iv) any sign on property owned, leased, or operated by the Maryland Stadium Authority.
(Ord. 16-581.)

§ 17-603. Billboards.

(a) *General prohibition.*

Except as otherwise specifically provided in this Code:

(1) the erection, placement, or construction of new billboards is prohibited; and

(2) the City may not issue permits for these signs.

(b) *Exceptions.*

(1) The following exceptions apply to this section.

(2) Subject to conditional use approval, 1 or more new billboards may be erected or placed on a publicly-owned stadium or arena, but must be accompanied by a plan for the removal elsewhere of at least 1 existing billboard for each new billboard to be placed or erected.

(3) Subject to conditional use approval, a digital billboard may be erected, but:

(i) must be accompanied by documentation that at least 3 existing billboard faces have been removed for each new digital billboard face to be placed or erected; and

(ii) in addition, must meet the following standards:

(A) each message or image displayed on a digital billboard must be static or depicted for at least 10 seconds;

(B) animation, streaming video, or images that move or give the appearance of movement are prohibited;

(C) no illumination from any digital billboard may glare directly into any residential premises or interfere with the safe movement of motor vehicles on public thoroughfares;

(D) all digital billboards must have ambient light monitors, which automatically adjust the brightness level of the electronic billboard based on ambient light conditions; and

(E) no digital billboard may have audio speakers or any audio component.

(3) Banners or signs mounted on streetlights and similar structures in the public right-of-way are not considered billboards and are subject to City regulations and permissions.
(Ord. 16-581.)

§ 17-604. Moving or flashing signs.

(a) *General prohibition.*

Except as provided in subsection (b) of this section or when allowed as a classic sign, no sign may have or consist of:

(1) any moving, rotating or otherwise animated part; or

(2) any flashing, blinking, fluctuating, or otherwise animated light.

(b) *Exceptions*.

In the non-residential districts, subsection (a) of this section does not apply to the following signs for non-residential uses only:

(1) indoor entertainment marquees;

(2) electronic message signs;

(3) signs that show the time of day, temperature, weather forecast, or news;

(4) barber poles; and

(5) scrolling newscast signs, but only in the C-5 District and subject to design review.

(Ord. 16-581.)

§ 17-605. Obscene signs.

No sign or other advertising device may display any matter in which the dominant theme of the material taken as a whole appeals to a prurient interest in sex or is patently offensive because it affronts contemporary community standards relating to the description or representation of sexual matters, and is utterly without redeeming social value.

(Ord. 16-581.)

§ 17-606. Painted signs.

(a) *Where prohibited.*

Signs painted directly on a roof, fascia, or parapet of a building or on a fence are prohibited.

(b) *Where allowed as wall signs.*

Signs painted directly on exterior walls must follow the same requirements as wall signs.

(Ord. 16-581.)

§ 17-607. Portable signs.

Portable signs are prohibited.

(Ord. 16-581.)

SUBTITLE 7
TEMPORARY SIGNS

§ 17-701. Temporary signs.

The following temporary signs are allowed with a sign permit.
(Ord. 16-581.)

§ 17-702. A-frame signs.

(a) *In general.*

A-frame signs are allowed with a building permit and, if placed in a public right-of-way, a minor privilege permit.

(b) *Regulations.*

(1) A-frame signs are subject to the following regulations.

(2) A-frame signs are allowed for non-residential uses within the C-1, C-1-E, C-1-VC, C-2, C-3, C-4, C-5, TOD, R-MU, D-MU, EC-2, H, and PC Districts.

(3) A-frame signs may not exceed 6 square feet per side in area and 4 feet in height.

(4) The use of A-frame signs is limited to business hours only. Signs must be stored indoors at all other times.

(5) A-frame signs may not be used outdoors when high winds or heavy rain conditions exist.

(6) Only 1 A-frame sign is allowed per business. A minimum separation of 8 feet separation is required between all A-frame signs.

(7) An A-frame sign must be placed on the property where the business is located and within 30 feet of the primary entrance of the business or on the right-of-way in front of property, and may not interfere with pedestrian traffic or violate standards of accessibility as required by the ADA or other accessibility codes.

(Ord. 16-581.)

§ 17-703. Attention-getting devices.

(a) *"Attention-getting device" defined.*

(1) *In general.*

"Attention-getting device" means any pennants, flag, festoon, spinner, streamer, searchlight, balloon, inflatable sign, strobe light, flood light, or similar device or ornamentation designed for the purpose of attracting attention.

(2) *Exclusions.*

"Attention-getting device" does not include:

(i) flags of nations or political subdivisions or of a patriotic, religious, philanthropic, civic, or educational organization; or

(ii) temporary holiday decorations.

(b) *In general.*

Attention-getting devices require a permit and are allowed for non-residential uses in the C-3, C-4, and PC Districts.

(c) *Regulations.*

(1) Attention-getting devices are subject to the following regulations.

(2) Attention-getting devices unrelated to a specific date are limited to a display period of 14 days. If related to a specific date these devices may be erected no earlier than 5 days before that date and must be removed within 3 days after that date. Attention-getting devices may be erected on a lot no more than 4 times in a year, with at least 7 days between display periods.

(3) Attention-getting devices may not be erected or maintained in any location or manner that could endanger the public safety, interfere with or obstruct pedestrian or vehicular travel, or create a traffic safety problem.

(4) Attention-getting devices may not be erected or maintained within any public right-of-way.

(5) As a condition of the issuance of a building permit, requirements may be imposed on the material, manner of construction, and method of erection as are reasonably necessary to assure the safety and convenience of the public.

(6) No inflatable promotional device may exceed 15 feet in height or the height of the principal building to which it relates, whichever is lower. No inflatable promotional device may be mounted on the roof of a structure.

(Ord. 16-581.)

§ 17-704. Temporary construction signs.

(a) *In general.*

Temporary non-illuminated construction signs of persons connected with work on buildings under active construction or alteration, indicating their names and information pertinent to the project, are allowed with a permit.

(b) *Aggregate size.*

(1) In the Residential, OS, and OR Districts, construction signs may not exceed a combined area for all signs of 36 square feet for each street frontage and 6 feet in height.

(2) In all other districts, construction signs may not exceed a combined area for all signs of 48 square feet for each street frontage and 10 feet in height.

(c) *Display period.*

These signs may not be erected before the approval of a site plan and must be removed no later than 7 days after the later of issuance of a use permit or completion of construction.

(Ord. 16-581.)

§ 17-705. Temporary subdivision or planned unit development signs.

(a) *In general.*

Temporary non-illuminated or indirectly illuminated subdivision development and planned unit development signs, indicating the names and information pertinent to the project, are allowed with a permit.

(b) *Aggregate size.*

(1) In the Residential, OS, and OR Districts, these signs may not exceed a combined area for all signs of 100 square feet for the project and 20 feet in height.

(2) In all other districts, these signs may not exceed a combined area for all signs of 180 square feet for the project and 20 feet in height.

(c) *Display period.*

These signs may not be erected before the approval of a site plan and must be removed no later than 7 days after the later of issuance of a use permit or completion of construction.

(Ord. 16-581.)

§ 17-706. Temporary pole signs.

(a) *In general.*

Temporary pole signs are permitted for any non-residential use and require a permit.

(b) *Regulations.*

(1) Temporary pole signs may not exceed 32 square feet in area and 6 feet in height.

(2) All temporary pole signs must be set back 10 feet from any property line.

(3) Temporary pole signs are limited to a display of 30 days. Temporary pole signs may be erected on a lot no more than 4 times in a year, with at least 7 days between display periods.

(Ord. 16-581.)

§ 17-707. Temporary wall signs.

(a) *In general.*

Temporary wall signs are permitted for any non-residential use and require a permit.

(b) *Size.*

A temporary wall sign may not exceed 32 square feet in area.

(c) *Height.*

No temporary wall sign may be located higher than the roofline of the building to which it is attached.

(d) *No encroachment.*

No temporary wall sign may encroach into the public right-of-way.

(e) *No covering doors, windows, etc.*

No temporary wall sign may cover windows, doors, or architectural features.

(f) *Display period.*

Temporary wall signs are limited to a display of 30 days. Temporary wall signs may be erected on a lot no more than 4 times in a year, with at least 7 days between display periods.

(Ord. 16-581.)

SUBTITLE 8
PERMANENT SIGNS

§ 17-801. Permits required.

The following permanent signs are allowed with a permit and, if projecting into the public right-of-way, a minor privilege permit.
(Ord. 16-581.)

§ 17-802. Awnings and canopies.

(a) *When not considered a sign.*

(1) Awnings and canopies that are considered an architectural feature of a structure and are not used for identifying the premises or the goods or services sold are not considered signs.

(2) Awnings and canopies that only identify the address of the structure are not considered signs.

(b) *Regulations.*

Awnings or canopies used as signs are subject to the following regulations.

(c) *Where allowed.*

Awning or canopy signs are allowed for multi-family dwellings and non-residential uses in any district.

(d) *Clearance; Location.*

(1) Awning or canopy signs must maintain a clearance of at least 8 feet.

(2) Awning or canopy signs must be located at least 1 foot from the curb line.

(e) *Printing.*

Printing on any awning or canopy sign may not exceed 25% of the surface area.

(f) *Construction.*

(1) Awning and canopy signs must be constructed out of canvas, canvas-like material, fabric, or metal. Back-lit box and plastic awnings are prohibited.

(2) Awning and canopy signs must be securely attached to and supported by a building. All frames and supports must be made of metal or similar rigid material. Frames and supports may not be made of wood or plastics.

(g) *Under-awning signs.*

(1) Under-awning signs are allowed in the C-1, C-1-E, C-1-VC, C-2, C-3, C-5, TOD, and PC Districts, subject to the following regulations.

(2) Under-awning signs must be attached to the underside of an awning. Under-awning signs may not project beyond the awning.

(3) Under-awning signs must maintain a clearance of at least 7 feet.

(4) No more than 1 under-awning sign is allowed for any business establishment with frontage on the street where the awning is mounted.

(5) Under-awning signs may not exceed 3 square feet in area.

(6) Under-awning signs must be securely fixed to the awning with metal supports.

(h) *Design standards.*

(1) Awning or canopy signs must comply with the following design standards.

(2) Awning or canopy signs must be compatible in material and construction to the style and character of the building. The color of the awning or canopy must be compatible with the overall color scheme of the facade.

(3) When feasible, awning or canopy signs should be generally aligned with others nearby in order to maintain a sense of visual continuity.

(4) Awning or canopy signs must be tailored to the opening of the building and positioned so that distinctive architectural features remain visible.

(Ord. 16-581.)

§ 17-803. Electronic message signs.

(a) *In general.*

Freestanding signs and wall signs in the OS, C-1, C-1-E, C-1-VC, C-2, C-3, C-4, C-5, EC-1, EC-2, H, I-2, MI, and PC Districts are allowed to include an electronic message sign, subject to the following regulations.

(b) *Number.*

There may be only 1 electronic message sign per business.

(c) *Design review.*

All electronic message signs are subject to design review.

(d) *Display.*

(1) Each message displayed on an electronic message sign must be:

(i) static or depicted for at least 10 seconds; and

(ii) limited to text only.

(2) The continuous scrolling of messages is prohibited.

(3) Electronic message signs may not display any off-premises advertising.

(e) *Illumination.*

No illumination from an electronic message component may:

(1) glare into any residential premises; or

(2) interfere with the safe movement of motor vehicles on public thoroughfares.

(f) *Size.*

(1) The electronic message component may not exceed 10 square feet in area, except in the C-1, C-1-E, and C-1-VC Districts, where the electronic message component may not exceed 6 square feet in area.

(2) Electronic message signs may be integrated into a freestanding or wall sign, but in no case may the combined sign area of the freestanding or wall sign and the electronic message sign exceed the allowed maximum sign area for the freestanding or wall sign.

(3) Electronic message signs in the C-5 District must maintain a clearance of at least 20 feet.

(g) *Prohibited on nonconforming signs.*

The addition of an electronic message sign to any nonconforming sign is prohibited.

(h) *Electronic display signs prohibited.*

Electronic display screens are not considered electronic message signs and are prohibited. *(Ord. 16-581.)*

§ 17-804. Freestanding signs.

(a) *In general.*

(1) Except as provided in *Table 17-804: Freestanding Sign Regulations*, freestanding signs are allowed for all non-residential uses, subject to the following regulations.

(2) Freestanding signs in the OS District are regulated by § 17-809 {"Open-Space directional signs"} and § 17-810 {"Open-Space identification signs"} of this subtitle.

(b) *Number.*

(1) 1 freestanding sign is allowed for each street frontage of a lot.

(2) A lot must have a minimum of 100 feet of frontage along the public right-of-way in order to erect a freestanding sign.

(c) *Design review.*

All freestanding signs in the C-5 District are subject to design review.

(d) *Sign on pole.*

All freestanding signs constructed on a pole must be securely built, constructed, and erected on posts and standards that are sunk below the natural surface in a manner that will prevent the sign from overturning.

(e) *No encroachment.*

No part of a freestanding sign may project into, over, or otherwise encroach on a public right-of-way.

(f) *Permissions, size, and height.*

Freestanding sign permissions, heights and sign areas are limited as shown in *Table 17-804: Freestanding Sign Regulations*.

(Ord. 16-581.)

§ 17-805. Marquees.

(a) *In general.*

Marquees are allowed for non-residential uses in the C-2, C-3, C-4, C-5, and PC Districts, subject to the following regulations.

(b) *Construction.*

(1) The manner of construction and materials used for all marquees must meet the requirements of this section and all other applicable City Code requirements.

(2) Marquees must be supported solely by the building to which they are attached. No exterior columns or posts are allowed as supports.

(3) Every marquee, including the anchors, bolts, supports, rods, and braces, must:

(i) be built securely;

(ii) be designed by a structural engineer or registered architect; and

(iii) comply with the Baltimore City Building and Electrical Codes.

(4) No marquee may be erected on any building or other structure of wood frame construction.

(c) *Roof.*

(1) The roof of a marquee may not be used for any purpose other than to form and constitute a roof.

(2) The roof of a marquee must be:

(i) constructed of noncombustible material; and

(ii) designed and constructed to support a live load of not less than 100 pounds per square foot.

(d) *Drainage.*

(1) Water from the roofs of marquees may not drain, drip, or flow onto the surface of a public right-of-way.

(2) Sufficient downspouts, drains, and gutters must be installed as part of each marquee to prevent water from the roof of the marquee from flowing onto the surface of a public right-of-way.

(e) *Placement.*

(1) Marquees are limited to the width of the building entrance plus an additional 5 feet on each side of the entrance doors covered by the marquee.

(2) All marquees must maintain a vertical clearance of at least 12 feet above the sidewalk or other public thoroughfare.

(3) Marquees may encroach up to 1 foot from the curb line.

(4) A minor privilege permit is required for any marquee that projects into the public right-of-way.

(f) *Attachments, advertising prohibited.*

(1) No temporary sign may be attached to or hung from a marquee.

(2) No advertising material may be placed upon the roof of any marquee.

(Ord. 16-581.)

§ 17-806. Menu board signs.

(a) *Number.*

Drive-through establishments are allowed 1 menu board sign for each drive-through lane.

(b) *Size; Height.*

A menu board may be no more than:

(1) 40 square feet in sign area; and

(2) 6 feet in height.

(c) *Location.*

A menu board may be no less than 15 feet from any lot line.

(d) *Illumination.*

Menu boards may be internally illuminated.
(Ord. 16-581.)

§ 17-807. Nameplates.

(a) *In general.*

Nameplates are allowed for all uses, subject to the following regulations.

(b) *Number.*

1 non-illuminated or indirectly illuminated nameplate is allowed for each street frontage of the lot.

(c) *Wall mounting.*

Nameplate signs must be wall signs and may be mounted no higher than 12 feet, as measured from the ground to the uppermost point of the sign.

(d) *Size.*

(1) For multi-family dwellings of 20 or more dwelling units and for any non-residential uses, nameplate signs are limited to 9 square feet.

(2) For all other uses, nameplate signs may not exceed 1 square foot.
(Ord. 16-581.)

§ 17-808. Neighborhood identification signs.

(a) *In general.*

Non-illuminated or indirectly illuminated identification signs, indicating the name of a neighborhood, are allowed in the Residential and OR Districts, subject to the following regulations.

(b) *Number*.

There may be no more than 2 neighborhood identification signs per neighborhood.

(c) *Size.*

Neighborhood identification signs may not exceed 48 square feet in area and 6 feet in height.

(d) *Encroachment.*

Neighborhood identification signs are allowed in the public right-of-way, subject to review and approval by the Director of Planning and the Department of Transportation.

(Ord. 16-581.)

§ 17-809. Open-Space directional signs.

(a) *In general.*

Non-illuminated signs that provide directions to destinations within Open-Space properties are allowed at entrances along the perimeter and within the interior of properties in an OS District.

(b) *Area.*

An Open-Space directional sign along the perimeter may not exceed 60 square feet in area.

(c) *Height.*

Open-Space directional signs may not exceed 10 feet in height.

(Ord. 16-581.)

§ 17-810. Open-Space identification signs.

(a) *In general.*

Open-Space identification signs for property and buildings are allowed within the OS District, subject to the following regulations.

(b) *Property identification signs.*

(1) 1 non-illuminated or indirectly illuminated freestanding identification sign, indicating the name of the property, is allowed at each entrance to the property.

(2) Property identification signs may not exceed 30 square feet in area and 6 feet in height.

(c) *Building identification signs*.

(1) 1 non-illuminated, indirectly illuminated, or directly illuminated sign is allowed on each side of a building.

(2) Building identification signs may not exceed 18 square feet in area, except for signs that are directly illuminated. Directly illuminated signs may not exceed 12 square feet in area.

(3) Freestanding building identification signs may not exceed 6 feet in height.

(4) Wall-mounted building identification signs may be mounted no higher than 6 feet, as measured from the ground to the uppermost point of the sign.

(Ord. 16-581.)

§ 17-811. Parking access signs.

(a) *In general.*

(1) Parking access signs are allowed for parking lots (principal use) and parking garages (principal use), subject to the following regulations.

(2) The following regulations do not apply to the parking facilities associated with and located on lots adjacent to a video lottery facility.

(b) *Number.*

1 non-illuminated, indirectly illuminated, or, in a C-5 district, internally illuminated sign, indicating the entrance to or exit from the parking lot or parking garage, is allowed for each street frontage of the lot.

(c) *Size*.

Parking access signs may not exceed 4 square feet in area.

(d) *Height.*

Parking access signs may not exceed 6 feet in height.

(Ord. 16-581.)

§ 17-812. Projecting signs.

(a) *In general.*

Except as provided in *Table 17-812: Projecting Sign Regulations*, projecting signs are allowed for all non-residential uses permitted within the district, subject to the following regulations.

(b) *Number.*

(1) 1 projecting sign is allowed for each establishment with frontage on a street.

(2) For a corner lot, 1 projecting sign is allowed for each street frontage.

(c) *Projection limit.*

A projecting sign may not project more than 4 feet from the face of the building to which it is attached, including the area between the sign and the face of the building.

(d) *Clearance; Height.*

(1) The bottom of any projecting sign must be at least 8 feet above the sidewalk or thoroughfare.

(2) No projecting sign affixed to a building may project higher than the building height, including the sign support structure.

(e) *Design and construction.*

(1) Projecting signs, including frames, braces, and supports, must be designed by a licensed structural engineer or manufacturer.

(2) Any movable part of a projecting sign, such as the cover of a service opening, must be securely fastened by chains or hinges.

(f) *Size.*

Projecting sign areas are limited as shown in *Table 17-812.*
(Ord. 16-581.)

§ 17-813. Residential identification signs.

(a) *In general.*

Subject to the following regulations, residential identification signs are allowed for:

(1) multi-family dwellings of 4 or more dwelling units; and

(2) rooming houses.

(b) *R-1A through R-10 Districts.*

(1) This subsection applies to the R-1A through R-10 Districts.

(2) 1 non-illuminated or indirectly illuminated residential identification sign is allowed for each street frontage.

(3) Residential identification signs may not exceed 15 square feet in area, except for signs that are directly illuminated. Directly illuminated signs may not exceed 12 square feet in area.

(4) Freestanding residential identification signs may not exceed 3 feet in height.

(5) Wall-mounted residential identification signs may be mounted no higher than 16 feet, as measured from the ground to the uppermost point of the sign.

(c) *Other Districts.*

(1) This subsection applies to all other districts.

(2) 1 non-illuminated or indirectly illuminated residential identification sign is allowed for each street frontage.

(3) Residential identification sign may not exceed 36 square feet in area, except for signs that are directly illuminated. Directly illuminated signs may not exceed 24 square feet in area.

(3) Freestanding residential identification signs may not exceed 8 feet in height.
(Ord. 16-581.)

§ 17-814. Roof signs.

(a) *In general.*

Subject to conditional use approval, a roof sign is authorized in the C-5, I-1, I-2, MI, and PC Districts, subject to the following regulations.

(b) *For identification only.*

The roof sign may only used to identify the business.

(c) *Location; Height.*

The roof sign:

(1) must be located on the side of a roof structure that forms a backdrop for it; and

(2) may not project more than 20 feet above the roof.
(Ord. 16-581.)

§ 17-815. Wall signs.

(a) *In general.*

Wall signs are allowed for non-residential uses in all districts, subject to the following regulations.

(b) *R-1A through R-8 Districts.*

(1) This subsection applies to the R-1A through R-8 Districts.

(2) 1 non-illuminated or indirectly illuminated wall sign is allowed for each street frontage.

(3) Wall signs may not exceed 18 square feet in area, except for signs that are directly illuminated. Directly illuminated signs may not exceed 12 square feet in area.

(c) *R-9 through R-10 and OR Districts.*

(1) This subsection applies to the R-9 through R-10 Districts and the OR District.

(2) 1 non-illuminated or indirectly illuminated wall sign is allowed for each street frontage.

(3) Wall signs may not exceed 36 square feet in area, except for signs that are directly illuminated. Directly illuminated signs may not exceed 24 square feet in area.

(d) *OS District.*

Wall signs in the OS District are regulated by § 17-809 {"Open-Space directional signs"} and § 17-810 {"Open-Space identification signs"}.

(e) *All other districts.*

(1) This subsection applies to all other districts, but does not apply to a video lottery facility.

(2) Wall signs may not exceed 1 square foot per linear foot of building frontage, subject to the following provisions of this subsection:

(3) For an interior lot, the maximum size of a wall sign is determined by measuring along the front building line, with a minimum of 25 square feet allowed.

(4) For a corner lot, the maximum size of a wall sign located on each building wall is determined by measuring along the building frontage located at the front or corner-side lot line, with a minimum of 25 square feet allowed for each first-floor or grade-level sign. The size of a wall sign on each side of the building is limited to the square footage calculated on that side only. In no case may the square footage allowed for the building wall located along the front lot line and the square footage allowed for the building wall located along the corner-side lot line be combined to create a larger sign on a wall other than that allowed on each individual wall.

(5) In a multi-tenant structure, the maximum size of a wall sign for each tenant at ground level is measured along each individual business frontage, with a minimum of 25 square feet allowed for a wall sign for each tenant. Multi-tenant structures with more than one story are allowed upper story wall signs as follows:

(i) In the C-5 and PC Districts, 1 square foot times the linear foot of total business upper story frontage, with a minimum of 25 square feet, allowed.

(ii) In all other districts, 15 square feet per upper story tenant.

(iii) If a multi-tenant structure is located on a corner lot, the maximum size of the wall sign located along the corner lot line is measured along the building frontage along the corner lot line, with a minimum of 25 square feet allowed.

(f) *Illumination of permanent signs.*

Permanent wall signs may be internally illuminated.

(g) *Mounting, etc.*

(1) Wall signs must be safely and securely attached to the building wall.

(2) Wall signs must be affixed flat against the wall and may not project more than 12 inches from the building wall.

(3) Any wall sign that projects into the public right-of-way requires a minor privilege permit.

(h) *Placement.*

(1) Wall signs must be located on the sign frieze – that is, on the portion of the building immediately above the ground-floor window and, in the case of a 2-story building, below the second-floor window sill.

(2) Wall signs installed above the ground floor are subject to design review.

(3) Wall signs may not exceed a height of 40 feet above grade, except for building identification signs in the C-5 and PC Districts in accordance with subsection (i) of this section.

(i) *C-5 and PC Districts.*

(1) Any structure in the C-5 and PC Districts that exceeds 10 stories is allowed a maximum of 1 building identification sign per building face.

(2) The sign must be placed within the top 25 feet of the structure and may not cover any window or architectural features.

(3) The maximum size of a building identification sign is 1 square foot per linear foot of lot frontage on that side of the facade.

(j) *Architecture.*

(1) No wall sign affixed to a building, including sign support structure, may project beyond the ends or top of the wall or higher than the roofline of the structure to which it is attached unless specifically permitted by § 17-814 {"Roof signs"} of this subtitle.

(2) Architectural features that are part of the original building design, such as chimneys, may have a sign affixed to them, subject to design review.

(3) On existing buildings, a parapet wall may not be constructed for the sole purpose of increasing the allowable height of a wall sign. For new buildings, when a sign is to be mounted on a parapet wall, that parapet wall must be consistent with the architectural design of the building, including building materials.

(4) Wall signs may not be attached to un-reinforced masonry parapets.

(5) Wall signs may not cover windows, doors, or architectural features.

(k) *Permanent banner signs.*

Permanent banner signs used as wall signs are subject to design review.

(l) Cabinet box wall signs.

Cabinet box wall signs are prohibited in the C-1, C-1-E, C-1-VC, C-2, OR, I-MU, R-MU, D-MU, and all residential districts.

(Ord. 16-581.)

§ 17-816. Window signs.

(a) *In general.*

Window signs are allowed for non-residential uses in all districts.

(b) *Aggregate size.*

(1) All window signs, whether temporary, permanent, or neon window signs, may occupy no more than 25% of the surface of each window area.

(2) "Window area" means a continuous surface undivided by any architectural or structural element. Mullions are not considered an element that divides a window area.

(Ord. 16-581.)

SUBTITLE 9
AREAS OF SPECIAL SIGN CONTROL

§ 17-901. Purpose.

The City recognizes that certain commercial areas present a unique character that could be enhanced with the application of sign standards that depart from the requirements of this title. In these circumstances, these standards would be considered supportive of the commercial area. The Planning Commission may recommend and the City Council may approve sign standards for permanent signs through their approval of an Area of Special Sign Control.
(Ord. 16-581.)

§ 17-902. Applicability.

(a) *Districts.*

(1) An Area of Special Sign Control may be applied for in the C-1, C-1-E, C-1-VC, C-2, C-3, C-4, C-5, I-MU, OR, or TOD District.

(2) The PC District is designated an area of Special Sign Control, subject to further approval by the Planning Commission of appropriate sign standards.

(b) *Size of Area.*

(1) An Area of Special Sign Control must cover an area of at least 2 block faces.

(2) The block faces may either be located directly across the street from each other or adjacent to each other along the street.

(3) The block faces may be in any district or combination of districts identified in subsection (a) of this section.

(c) *Notice of application.*

(1) When an application for designation of an Area of Special Sign Control is submitted, the applicant must mail notice to all property owners in the proposed area.

(2) The notice must describe:

(i) the boundaries of the proposed area;

(ii) the proposed Sign Plan for that area; and

(iii) the exceptions that would be allowed under the Sign Plan.

(3) The notice must also inform the property owners that they have 15 days to notify the Director of Planning of opposition to the Area of Special Sign Control.

(4) If 51% of owners object to the designation, the Director of Planning may not approve the application.

(Ord. 16-581.)

§ 17-903. Sign Plan.

(a) *Required.*

As part of the request for establishment of an Area of Special Sign Control, a Sign Plan must be submitted.

(b) *Contents.*

The Sign Plan must describe the proposed sign standards for the Area of Special Sign Control, including all exceptions to the requirements of this title.

(c) *Scope,*

The Sign Plan may be more restrictive or more permissive than the standards of this title.

(Ord. 16-581.)

§ 17-904. Process.

An Area of Special Sign Control and accompanying Sign Plan (and any subsequent amendment to either) requires approval by ordinance, in accordance with the applicable procedures of Title 5, Subtitle 5 {"Legislative Authorizations"} of this Code.

(Ord. 16-581.)

SUBTITLE 10
NONCONFORMING SIGNS

§ 17-1001. In general.

Regulations governing nonconforming signs are in Title 18, Subtitle 5 {"Nonconforming Signs"} of this Code.
(Ord. 16-581.)

{PAGE LEFT INTENTIONALLY BLANK}

TITLE 18
NONCONFORMITIES

SUBTITLE 1
PURPOSE OF TITLE

§ 18-101. Purpose.

(a) *Background.*

This Code establishes separate districts, each of which is an appropriate area for the location of the uses and structures that are allowed in that district. Consistent with the establishment of those districts, all uses and structures incompatible with allowed uses and structures must be strictly regulated and properly controlled.

(b) *Regulation.*

This title provides for the regulation of nonconforming uses and structures existing in the various districts. Specifically, this title regulates the continuance of nonconforming uses, structures, lots, and signs.

(Ord. 16-581.)

SUBTITLE 2
DEFINITIONS; GENERAL PROVISIONS

§ 18-201. Definitions.

(a) *In general.*

In this title, the following terms have the meanings indicated.

(b) *Nonconforming lot.*

"Nonconforming lot" means a lawfully existing lot that, as of the effective date of this Code (June 5, 2017) or the effective date of an amendment to this Code, does not comply with the lot area or lot width regulations applicable to the district in which it is located.

(c) *Nonconforming structure.*

"Nonconforming structure" means a lawfully existing structure that, as of the effective date of this Code (June 5, 2017) or the effective date of an amendment to this Code, does not comply with the bulk, yard, or other regulations applicable to the district in which it is located.

(d) *Nonconforming use.*

"Nonconforming use" means a lawfully existing use of a structure or of land that, as of the effective date of this Code (June 5, 2017) or the effective date of an amendment to this Code, does not conform to the use regulations applicable to the district in which it is located.

(Ord. 16-581; Ord. 17-015.)

§ 18-202. Authority to continue.

(a) *Legal use, structure, or lot.*

Except as otherwise specified in this title, any use, structure, or lot that existed as a lawful nonconforming use, structure, or lot as of June 5, 2017, and any use, structure, or lot that has been made nonconforming because of the terms of this Code or any subsequent amendment to this Code, may continue subject to the provisions of this title so long as it remains otherwise lawful.

(b) *Unlawful use or structure.*

A use or structure that was unlawful as of June 5, 2017, remains unlawful to the extent that the use or structure conflicts with any of the requirements of this Code or of the Baltimore City Building, Fire, and Related Codes Article, including the requirements to obtain a use permit and an occupancy permit.

(Ord. 16-581; Ord. 17-015.)

§ 18-203. Safety regulations.

All police power laws and regulations enacted to promote the public health, safety, and welfare, including all building, fire, and health codes, apply to nonconforming structures.
(Ord. 16-581.)

§ 18-204. Nonconformity not established by casual, etc., uses.

A casual, temporary, or unlawful use of any land or structure does not establish any nonconforming use, nonconforming density, or other form of nonconformity.
(Ord. 16-581.)

§ 18-205. Nonconformity with off-street parking requirements.

No use may be construed as nonconforming solely by reason of nonconformance with the off-street parking requirements of this Code.
(Ord. 16-581.)

§ 18-206. Determination of nonconformity.

(a) *By BMZA.*

Whether a nonconforming use, nonconforming density, or other form of nonconformity exists is a question of fact that, except as specified in subsection (b) of this section, must be decided by the Board of Municipal and Zoning Appeals after public notice and hearing and in accordance with the rules of the Board.

(b) *By Administrator*.

The Zoning Administrator may issue a use permit, without referring the matter to the Board of Municipal and Zoning Appeals, if:

(1) permits, ordinances, the Police Survey of 1931, or other records on file with the Zoning Administrator:

(i) document the existence of a lawful nonconforming use, nonconforming density, or other nonconformance; and

(ii) clearly show its continued and uninterrupted use to the date of inquiry or application; and

(2) a field inspection of the construction, design, and arrangement of the structure or use in question confirms these records.
(Ord. 16-581; Ord. 17-015.)

SUBTITLE 3
NONCONFORMING USES

§ 18-301. Continuation.

Except as otherwise specified in this Code, nonconforming uses may be continued, subject to the regulations of this subtitle.
(Ord. 16-581.)

§ 18-302. Expansion of use.

A nonconforming use may not be expanded in any manner, nor may any structure be erected or expanded, unless the use of the land and the structure are made to conform to the regulations of the district in which they are located.
(Ord. 16-581.)

§ 18-303. Repairs and alterations.

(a) *Maintenance and repairs.*

Normal maintenance and incidental repair may be performed on any structure that is devoted in whole or in part to a nonconforming use, as long as the maintenance or repair will not, in any way, create any new nonconformity, increase the degree of any nonconformity, or increase the bulk of the structure.

(b) *Structural alterations.*

No structural alteration may be performed on any structure devoted to a nonconforming use, unless:

(1) the alteration is required by law;

(2) the alteration is necessary to restore the structure to a safe condition on order of any official charged with protecting the public safety;

(3) the alteration is for the purpose of bringing about a conforming use; or

(4) the alteration will not, in any way, create any new nonconformity, increase the degree of any nonconformity, or increase the bulk of the structure.

(Ord. 16-581.)

§ 18-304. Restoration of damaged structures.

(a) *In general.*

If a structure containing a nonconforming use is damaged or destroyed, the structure may be repaired or reconstructed and the nonconforming use re-established as long as no new nonconformities are created and the existing degree of any nonconformity is not increased.

(b) *Timely restoration required.*

(1) A building permit must be obtained for the repair or reconstruction within 1 year of the date of the damage or destruction.

(2) The Board of Municipal and Zoning Appeals may grant an extension of this period.

(c) *Effect of failure to act timely.*

If a building permit is not obtained within the time required by this section or the repairs not completed within 1 year of the issuance of the building permit, then the use may not be reestablished unless the structure and the use conform to all regulations of the district in which they are located.

(Ord. 16-581.)

§ 18-305. Relocation.

(a) *On same lot.*

A nonconforming structure or use may not be relocated, in whole or in part, to any other location on the same lot.

(b) *To another lot.*

A nonconforming use may be relocated to another lot only if the use conforms to all regulations of the zoning district in which the new lot is located, including all use regulations.

(Ord. 16-581.)

§ 18-306. Change of use.

(a) *Change described.*

A change of use occurs when an existing nonconforming use has been terminated and another use has commenced.

(b) *When change allowed.*

A nonconforming use may not be changed to any other use except one that is allowed within the zoning district in which it is located.

(c) *Reversion prohibited.*

When a nonconforming use has been changed, in whole or in part, to an allowed use, the whole or part that has been made to conform may not later be changed back to a nonconforming use.

(d) *Violation constitutes abandonment.*

Any change in use that violates this Code constitutes an abandonment of the previously existing nonconforming use.

(Ord. 16-581.)

§ 18-307. Discontinuance or abandonment.

(a) *Discontinuance of use.*

Whenever the active and continuous operation of any nonconforming use, or any part of that use, has been discontinued for 12 consecutive months:

(1) the discontinuance constitutes an abandonment of the discontinued nonconforming use, or discontinued part of that use, regardless of any reservation of an intent to resume active operations or otherwise not abandon the use; and

(2) the discontinued nonconforming use, or discontinued part of that use:

(i) may not be reestablished; and

(ii) any subsequent use of any part of the land or structure previously used for the discontinued use, or discontinued part of that use, must conform to the regulations of the district in which the land or structure is located.

(b) *Abandonment of use.*

If, at any time, actual abandonment in fact is evidenced by removal of structures, machinery, or equipment, or by alterations that indicate a change in the use of any part of the land or structure:

(1) that action constitutes an abandonment of the nonconforming use, or affected part of that use; and

(2) all rights to continue or reestablish the nonconforming use, or part of that use, immediately terminate.

(Ord. 16-581.)

§§ 18-308 to 18-309. *{Reserved}*

§ 18-310. Junk or scrap storage and yards; Vehicle dismantling facilities; Landfills.

(a) *Status.*

A junk or scrap storage and yard, a vehicle dismantling facility, or a landfill lawfully existing as of June 5, 2017, is considered a lawful nonconforming conditional use, subject to the conditions and restrictions previously imposed.

(b) *Modifications – Junk ... yards; Vehicle dismantling.*

For a lawful nonconforming junk or scrap storage and yard or a lawful nonconforming vehicle dismantling facility:

(1) structural alterations are permitted; and

(2) an expansion of no more than 25% in land area is allowed if, in addition to any conditions and restrictions previously imposed:

(i) the expansion is onto a property that is no more than 750 feet from the property line of the junk or scrap storage and yard or the vehicle dismantling facility; and

(ii) the expansion is onto the portion of that property that is closest to the existing use.

(c) *Modifications – Landfills.*

For a lawful nonconforming landfill:

(1) structural alterations are permitted; and

(2) an expansion of no more than 35% in land area is allowed if, in addition to any conditions and restrictions previously imposed:

(i) the expansion is onto a property that is no more than 750 feet from the property line of the landfill; and

(ii) the expansion is onto the portion of that property that is closest to the existing use.

(d) *Lot subdivision or consolidation.*

The area to be used for the expansion must be subdivided into a separate lot or, if possible, consolidated as part of the existing junk or scrap storage and yard, vehicle dismantling facility, or landfill to avoid having a use allowed on a portion of a lot but not on the whole lot.

(Ord. 16-581; Ord. 17-015.)

SUBTITLE 4
NONCONFORMING STRUCTURES

§ 18-401. Application of subtitle.

(a) *Subtitle inapplicable to nonconforming signs.*

This subtitle does not apply to nonconforming signs. Nonconforming signs are instead regulated by Subtitle 5 of this title.

(b) *Nonconforming structure devoted to nonconforming use.*

(1) If a nonconforming structure is also devoted in whole or in part to a nonconforming use, the structure is subject to both:

(i) the provisions of this title that govern nonconforming uses; and

(ii) the provisions of this subtitle.

(2) In the event of any conflict or inconsistency between the provisions that govern nonconforming uses and the provisions of this subtitle, the provisions that govern nonconforming uses control.

(Ord. 16-581; Ord. 17-015.)

§ 18-402. Continuation.

Except as otherwise specified in this Code, nonconforming structures may be continued, subject to the requirements of this subtitle.

(Ord. 16-581.)

§ 18-403. Expansion of structure.

A nonconforming structure may not be expanded if the expansion would, in any way, create a new nonconformity, increase the degree of any nonconformity, or increase the bulk of the structure.

(Ord. 16-581.)

§ 18-404. Repairs and alterations.

(a) *Maintenance and repairs.*

Normal maintenance and incidental repair may be performed on any nonconforming structure, as long as the maintenance or repair will not, in any way, create any new nonconformity, increase the degree of any nonconformity, or increase the bulk of the structure.

(b) *Structural alterations.*

No structural alterations may be performed on any nonconforming structure, unless:

(1) the alteration is required by law;

(2) the alteration is necessary to restore the structure to a safe condition on order of any official charged with protecting the public safety;

(3) the alteration will result in eliminating the nonconformity; or

(4) the alteration will not, in any way, create any new nonconformity, increase the degree of any nonconformity, or increase the bulk of the structure.

(Ord. 16-581.)

§ 18-405. Restoration of damaged structures.

(a) *In general.*

If a nonconforming structure is damaged or destroyed, the structure may be repaired or reconstructed as long as no new nonconformities are created and the existing degree of nonconformity is not increased.

(b) *Timely restoration required.*

(1) A building permit must be obtained for the repair or reconstruction within 2 years of the date of the damage or destruction.

(2) The Board of Municipal and Zoning Appeals may grant an extension of this period.

(c) *Effect of failure to act timely.*

If the building permit is not obtained within the time required by this section or the repairs not completed within 1 year of the issuance of the building permit, then the structure may not be restored unless the structure conforms to all regulations of the district in which it is located.

(Ord. 16-581.)

§ 18-406. Relocation.

A nonconforming structure may not be moved, in whole or in part, to any other location on the lot, unless the structure or the moved part of the structure is made to comply with the bulk and yard regulations of the district in which the structure is located.

(Ord. 16-581; Ord. 17-015.)

§§ 18-407 to 18-410. *{Reserved}*

§ 18-411. Exceptions – Administrative bulk adjustments.

(a) *In general.*

A minor expansion of a nonconforming structure may be made with the administrative approval of the Zoning Administrator, as provided in this section.

(b) *Application; Certifications.*

(1) An application under this section must be filed by the property owner or with the written consent of the property owner.

(2) The application must be filed with the Zoning Administrator, in the form and with the information and accompanying plans that the Zoning Administrator requires.

(3) The application must include a certification by the property owner:

(i) that the structure is a nonconforming structure; and

(ii) that a copy of the application has been given to the owners of the adjoining properties.

(4) On receipt of an application, the Zoning Administrator must promptly refer it to the Director of Planning for design review.

(c) *Review and approval.*

The Planning Director may recommend approval of the application if, after design review, the Director finds that the proposal:

(1) is in harmony with the general character, arrangement, design, and architectural features of similar buildings within a radius of 300 feet;

(2) is not contrary to the public interest; and

(3) is consistent with the purposes and intent of this Code.

(d) *Imposition of conditions.*

To the extent necessary or desirable to reduce or minimize any effect of a proposed expansion on other properties in the neighborhood, the Planning Director may recommend:

(1) requiring changes in any design or plan of any existing structure or any alteration of the structure; and

(2) imposing conditions, restrictions, and limitations governing:

(i) screening or fencing;

(ii) type of lighting; and

(iii) any other relevant matter.

(e) *Final decision.*

(1) A copy of the Planning Director's recommendation on the application must be filed with the Zoning Administrator.

(2) When issued, the Director's decision constitutes a recommendation to the Zoning Administrator. The Zoning Administrator's decision is a final decision for purposes of administrative appeal under Title 19, Subtitle 3 {"Administrative and Judicial Review"} of this Code.

(f) *Compliance required.*

(1) Failure to comply with any change, condition, restriction, or limitation imposed under this section constitutes a violation of this Code.

(2) No condition, restriction, or limitation imposed under this section may be changed unless, on the filing of a new application, that change is authorized under this section.

(Ord. 16-581; Ord. 17-015.)

§ 18-412. Exceptions – Multi-family structures.

(a) *Scope.*

(1) Except as provided in paragraph (2) of this subsection, this section applies to any structure that:

(i) at any time, with or without authorization of the Board of Municipal and Zoning Appeals, has been converted for 4 or more dwelling units or, if originally built for 4 or more dwelling units, has been converted to increase the number of dwelling units; and

(ii) now fails to comply with the minimum lot area requirements of the district in which it is located.

(2) This section does not apply to any nonconforming structure that:

(i) in compliance with this Code or before June 5, 2017, was originally designed and built as a multi-family dwelling for 4 or more dwelling units, as evidenced by permits or records of the City; and

(ii) has not been altered, added to, or subdivided in any way that increases the number of dwelling units to more than the maximum now allowed under this Code.

(b) *Discontinuance of dwelling unit.*

Whenever the active and continuous use of a dwelling unit in a nonconforming multi-family structure subject to this section has been discontinued for 12 consecutive months:

(1) the discontinuance constitutes an abandonment of that dwelling unit, regardless of any reservation of an intent to resume active use of or to reoccupy the unit or otherwise not to abandon it; and

(2) the number of dwelling units allowed to continue in the structure is reduced by 1.

(c) *Abandonment of dwelling unit.*

If, at any time, actual abandonment is in fact is evidenced by removal of plumbing or kitchen facilities, by alterations that indicate an abandonment of any nonconforming dwelling unit, including consolidation with another dwelling unit, or by the issuance of a use permit for fewer dwelling units:

(1) that action constitutes an abandonment of the dwelling unit;

(2) all rights to continue or reestablish the previous number of dwelling units immediately terminate; and

(3) the number of dwelling units allowed to continue in the structure is reduced by 1.

(Ord. 16-581; Ord. 17-015.)

§ 18-413. Structures in Hospital Campus and Educational Campus Districts.

All lawfully existing structures that, as of June 5, 2017, are located in a Hospital Campus Zoning District or an Educational Campus Zoning District are considered to be conforming structures.

(Ord. 16-581; Ord. 17-015.)

SUBTITLE 5
NONCONFORMING SIGNS

§ 18-501. In general.

Signs that were lawful when erected but no longer conform to the requirements of this Code must comply with the following regulations.
(Ord. 16-581.)

§ 18-502. Alterations, replacements, relocations, etc.

Any nonconforming sign may be structurally altered, reconstructed, replaced, or relocated, as long as the alteration, reconstruction, replacement, or relocation does not result in:

(1) an increase in the area or any dimension of the sign;

(2) an increase in the degree of illumination of the sign;

(3) the addition of:

(i) any moving, rotating or otherwise animated part; or

(ii) any flashing, blinking, fluctuating, or otherwise animated light; or

(4) any other increase in the degree of the sign's nonconformity.
(Ord. 16-581.)

§ 18-503. Restoration of damaged signs.

If a nonconforming sign is damaged or destroyed to the extent of more than 50% of the sign's fair market value immediately preceding the damage, the sign may not be repaired or reconstructed unless it will then conform to all applicable regulations for the district.
(Ord. 16-581.)

§ 18-504. Changes to billboards.

(a) *BMZA approval required.*

Any change to a nonconforming billboard requires the approval of the Board of Municipal and Zoning Appeals.

(b) *Findings and conditions.*

The Board of Municipal and Zoning Appeals must find, and require as conditions of approval, that:

(1) the sign conforms to its original approvals;

(2) neither the height nor size of the sign will be increased; and

(3) the sign will not be relocated more than 10 feet from its originally approved location.

(c) *Prohibited additions or alterations.*

The Board of Municipal and Zoning Appeals may not authorize the following additions or alterations to nonconforming billboards:

(1) internally illuminated box signs;

(2) neon signs;

(3) tri-vision signs; or

(4) fluctuating signs, other than for time or temperature.

(d) *Supporting structure.*

The Board of Municipal and Zoning Appeals may approve a change in the sign's supporting structure.

(Ord. 16-581.)

SUBTITLE 6
NONCONFORMING LOTS

§ 18-601. Construction of single-family dwelling.

(a) *Scope.*

This section does not apply in an Industrial District.

(b) *When allowed.*

On a nonconforming lot that was established before June 5, 2017, a single-family dwelling may be erected regardless of the minimum lot area requirements imposed by this Code as long as:

(1) the nonconforming lot meets all other requirements of this Code; and

(2) the owner of the nonconforming lot does not also own any abutting lot that can be consolidated with the nonconforming lot.

(Ord. 16-581; Ord. 17-015.)

SUBTITLE 7
MANDATORY TERMINATION OF CERTAIN USES

§ 18-701. Retail goods establishment – with alcoholic beverage sales.

(a) *In general.*

Except as provided in subsection (b) of this section, retail goods establishments with alcoholic beverage sales in a residential district must be terminated as follows:

(1) for an establishment with alcoholic beverage sales that existed as a lawful nonconforming use before June 5, 2017, no later than June 4, 2019, notwithstanding the issuance of any prior use permit as a nonconforming package goods liquor store; and

(2) for an establishment that becomes nonconforming on or after June 5, 2017, whether by the enactment of this Code, by the enactment of an amendment to this Code, or by the reclassification of the property, no later than 3 years after the date on which the use became nonconforming.

(b) *Waiver for hardship.*

(1) *Board Authority.*

The Board of Municipal and Zoning Appeals may extend by an additional 2 years the time by which a retail goods establishment with alcoholic beverage sales must terminate the nonconforming use.

(2) *Timely application.*

To obtain an extension, the property owner or lessee must apply to the Board, in writing, within 1 year after the effective date of this Code (June 5, 2017), of the amendment to this Code, or of the property reclassification, as the case may be.

(3) *General considerations.*

(i) For nonconforming uses existing before June 5, 2017, the property owner or lessee seeking an extension must establish the existence of one of the following factors that would render termination within the time required by subsection (a) of this section a hardship:

(A) purchase of the property after January 1, 2008, and before April 1, 2012;

(B) investment in capital improvements to the property in excess of $100,000 after June 30, 2007, and before April 1, 2012; or

(C) a lease that was entered into before April 1, 2012, has a term remaining in excess of 10 years, and is not terminable by the lessee because of zoning changes prohibiting the use.

(ii) For all other uses that become nonconforming, whether by enactment of this Code, by the enactment of an amendment to this Code, or by reclassification of the property, the property owner or lessee seeking an extension must establish the existence of one of the following factors that would render termination within the time required by subsection (a) of this section a hardship:

(A) purchase of the property within the 5 years immediately preceding the enactment of this Code, the enactment of the amendment to this Code, or the enactment of the property reclassification, as the case may be;

(B) investment in capital improvements to the property in excess of $100,000 after June 30, 2007, and before April 1, 2012; or

(C) a lease that was entered into before April 1, 2012, has a term remaining in excess of 10 years, and is not terminable by the lessee because of zoning changes prohibiting the use.

(Ord. 16-581; Ord. 17-015.)

§ 18-702. Taverns.

(a) *In general.*

Nonconforming taverns must either:

(1) fully comply with § 14-337 {"Taverns"} within 2 years after they become nonconforming; or

(2) be terminated.

(b) *Waiver for hardship*.

A waiver extending the time for compliance based on hardship may be applied for in accordance with § 18-701(b) {"Retail good establishments...: Waiver for hardship"} of this subtitle.

(Ord. 16-581.)

{PAGE LEFT INTENTIONALLY BLANK}

TITLE 19
PROHIBITED CONDUCT; ENFORCEMENT; ADMINISTRATIVE AND JUDICIAL REVIEW

SUBTITLE 1
PROHIBITED CONDUCT

§ 19-101. Prohibited conduct.

No person may:

(1) violate any provision of this Code, of any rule, regulation, or manual adopted under this Code, or of any permit, notice, or order issued under this Code;

(2) refuse, neglect, omit, or otherwise fail to comply with any provision of this Code, of any rule, regulation, or manual adopted under this Code, or of any permit, notice, or order issued under this Code;

(3) resist the enforcement of any provision of this Code, of any rule, regulation, or manual adopted under this Code, or of any notice or order issued under this Code; or

(4) cause any of these acts or omissions to be done.

(Ord. 16-581; Ord. 17-015.)

§ 19-102. Each day a separate offense.

Each day that a violation continues after written notice from the Zoning Administrator constitutes a separate offense.

(Ord. 16-581; Ord. 17-015.)

SUBTITLE 2. ENFORCEMENT

PART I. DEFINITIONS

§ 19-201. "Person responsible" defined.

In this subtitle, "person responsible" means any owner, operator, manager, or tenant of a property or use subject to this Code, or any other person responsible for or having the care, control, or possession of that property or use, whether as a principal or as an agent, personal representative, trustee, guardian, or otherwise, and whether alone or jointly with any other person.
(Ord. 16-581; Ord. 17-015.)

§§ 9-202 to 9-205. *{Reserved}*

PART II. VIOLATION NOTICE

§ 19-206. Issuance.

(a) *In general.*

Whenever the Zoning Administrator learns of a violation of § 19-101 {"Prohibited conduct"} of this Code, the Zoning Administrator may issue a violation notice to:

(1) the owner of record of the property, as shown on the tax records of Baltimore City; and

(2) any other person who the Zoning Administrator has reason to believe is a person responsible for the violation.

(b) *Contents of notice.*

The notice must:

(1) specify the location and nature of the violation;

(2) cite the provisions of this Code or of the rules, regulations, manual, permit, notice, or order that have been violated;

(3) state the requirements that must be complied with to rectify the violation and the time within which the violation must be rectified; and

(4) advise the recipient of the right to request a hearing within 10 days of the date on which the notice was served.

(c) *Compliance required.*

On receipt of a violation notice from the Zoning Administrator, the recipient must immediately take appropriate steps to correct the violation.
(Ord. 16-581; Ord. 17-015.)

§ 19-207. Service.

(a) *In general.*

Except as otherwise specified in this Code, all notices issued by the Zoning Administrator must be served on:

(1) the person for whom the notice is intended; or

(2) an authorized agent or representative of that person.

(b) *More than 1 person responsible.*

If more than 1 person is responsible for the violation or otherwise responsible for complying with this Code, as in a case of property owned by more than 1 person, notice may be served on any 1 of those persons or on any authorized agent or representative of any of them.

(c) *Method of service – In general.*

A notice is properly served on a person if:

(1) served personally on that person (or on that person's authorized agent or representative);

(2) hand-delivered to the home or business address of that person (or of that person's authorized agent or representative); or

(3) sent by certified or registered mail, return receipt requested, to the home or business address of that person (or of that person's authorized agent or representative).

(d) *Method of service – Posting.*

Adequate and sufficient notice may be made by posting a copy of the notice on the property in question if:

(1) the identity or whereabouts of the person responsible *{is}* unknown; or

(2) a notice that was hand-delivered or mailed under subsection (c) of this section is refused, returned unclaimed, or designated undeliverable by the post office for any reason, and neither of the following sources can provide a more accurate address:

(i) the tax records of the City's Bureau of Treasury Management, Collections Division; and

(ii) the property registration files of the Department of Housing and Community Development.

(Ord. 16-581; Ord. 17-015.)

§ 19-208. Extension of time limit.

The Zoning Administrator may extend the time within which to comply with a violation notice if, in the Administrator's judgment, more time is needed to comply.
(Ord. 16-581; Ord. 17-015.)

§§ 19-209 to 19-210. *{Reserved}*

PART III. SUBSEQUENT PROCEEDINGS

§ 19-211. Remedies generally.

(a) *Administrator may seek.*

If a violation is not promptly discontinued and rectified or if a violation notice is not complied with promptly, the Zoning Administrator may institute or cause to be instituted any appropriate civil or criminal action or proceeding to secure compliance.

(b) *Types of proceedings.*

These enforcement proceedings include:

(1) civil court proceedings (*see* § 19-213);

(2) service of citations (*see* § 19-214; and

(3) criminal prosecution (*see* § 19-215).
(Ord. 16-581; Ord. 17-015.)

§ 19-212. Remedies not exclusive.

In pursuing a violation, the Zoning Administrator may use any one or more available remedies or enforcement actions. The initiation of any one remedy or enforcement action does not preclude pursuing any other remedy or enforcement action authorized by law.
(Ord. 16-581; Ord. 17-015.)

§ 19-213. Civil court proceedings.

(a) *In general.*

The Zoning Administrator, on behalf of the Mayor and City Council, may file a petition in Circuit Court to compel compliance with or obtain other relief under this Code.

(b) *Judicial relief.*

In an action brought under this section, the court may compel compliance with this Code by:

(1) issuing an order to cease and desist from a violation; and

(2) granting other injunctive relief, as appropriate to:

(i) prevent unlawful construction;

(ii) restrain, correct, or abate a violation;

(iii) prevent illegal occupancy of a structure or premises; or

(iv) stop an illegal act, conduct, business, or use of a structure on or about any premises.

(c) *Civil fines and costs.*

In an action brought under this section, the court may also:

(1) impose a civil fine of up to $500 for each day that a violation continues; and

(2) award to the City reasonable enforcement costs and attorney's fees, whether or not the attorney is a salaried employee of the City.

(Ord. 16-581; Ord. 17-015.)

§ 19-214. Enforcement by citation.

In addition to any other civil or criminal remedy or enforcement procedure, this Code may be enforced by issuance of the following:

(1) an environmental citation under City Code Article 1, Subtitle 40 {"Environmental Control Board"};

(2) a civil citation under City Code Article 1, Subtitle 41 {"Civil Citations"}; and

(3) a pre-payable criminal citation under City Code Article 19, Subtitle 71 {"Special Enforcement Officers"}.

(Ord. 16-581; Ord. 17-015.)

§ 19-215. Criminal penalties.

Any person who violates any provision of § 19-101 {"Prohibited conduct"} of this title is guilty of a misdemeanor and, on conviction, is subject to a fine of not more than $500 or imprisonment for not more than 30 days or both fine and imprisonment for each offense.

(Ord. 16-581; Ord. 17-015.)

SUBTITLE 3. ADMINISTRATIVE AND JUDICIAL REVIEW

§ 19-301. Administrative appeals.

(a) *Who may appeal.*

A decision of the Zoning Administrator or other authorized administrative officer or unit, including the issuance of a violation notice under Subtitle 2 {"Enforcement"} of this title, may be appealed to the Board of Municipal and Zoning Appeals by:

(1) any person aggrieved by the decision; or

(2) any officer or department, board, bureau, or other unit of the City affected by the decision.

(b) *When and how taken.*

(1) The notice of appeal must be filed as follows:

(i) in the case of a violation notice, within 10 days of the date the notice was served; and

(ii) in the case of any other decision, within 10 days of the date on which notice of the decision was given.

(2) The notice of appeal must:

(i) be filed with the Zoning Administrator, in the form that the rules of the Board of Municipal and Zoning Appeals require; and

(ii) specify the grounds for the appeal.

(3) Once the Zoning Administrator determines the notice of appeal is timely and complete, the Zoning Administrator must transmit the notice to the Board of Municipal and Zoning Appeals, together with all information that constitutes the record of the action appealed from.

(c) *Stay of proceedings.*

(1) If the appeal is timely filed and pursued, an appeal to the Board of Municipal and Zoning Appeals stays all proceedings in furtherance of the action appealed from, except as provided in paragraph (2) of this subsection.

(2) If the Zoning Administrator certifies to the Board of Municipal and Zoning Appeals that, by reason of facts stated in the certification, a stay would, in his or her opinion, cause imminent peril to life or property or is not justified by any material fact, the proceedings are not stayed, unless otherwise ordered by the Board of Municipal and Zoning Appeals or, on application to a court of competent jurisdiction, with notice to the Zoning Administrator, by the court on good cause shown.

(d) *Decision of Board.*

(1) Within 30 days of the public hearing, the Board of Municipal and Zoning Appeals must render its decision in writing, setting forth its findings of fact and conclusions of law. If, however, the Board of Municipal and Zoning Appeals determines that additional time is needed to render a decision, the Board may, on written notice to the parties, extend the time for an additional 30 days.

(2) In exercising its powers of review, the Board of Municipal and Zoning Appeals may:

(i) reverse or affirm, wholly or in part, or modify the decision appealed from; and

(ii) make any order, requirement, decision, or determination as ought to be made in accordance with this Code.

(3) For these purposes, the Board of Municipal and Zoning Appeals has all the powers conferred by this Code on the Zoning Administrator.

(Ord. 16-581; Ord. 17-015.)

§ 19-302. Judicial review.

(a) *Final administrative decision.*

All decisions and findings of the Board of Municipal and Zoning Appeals that are made on appeals, on application for conditional uses or variances, and in all other matters on which the Board of Municipal and Zoning Appeals is required to act after public notice and hearing, are final administrative decisions, subject to judicial review.

(b) *Who may seek.*

Judicial review of a final administrative decision of the Board of Municipal and Zoning Appeals may be sought by:

(1) any person aggrieved by the decision; or

(2) any officer or department, board, bureau, or other unit of the City aggrieved by the decision.

(c) *How and when taken.*

(1) This review must be sought within the time and in the manner required by law and the Maryland Rules of Procedure.

(2) Before the petition for judicial review is filed with the court, the petitioner must file a copy with the Board of Municipal and Zoning Appeals and the Zoning Administrator.

(3) The Board of Municipal and Zoning Appeals must promptly notify the City Solicitor of the filing of every petition for judicial review.

(d) *Stay of proceedings.*

(1) The filing of a petition for judicial review does not stay the proceedings for which the review is sought.

(2) On motion and hearing, the court may grant a stay on good cause shown, subject to the conditions of bond or otherwise that the court considers proper.

(Ord. 16-581; Ord. 17-015.)

§ 19-303. Appellate review.

Any party to the judicial review may appeal the court's final judgment to the Court of Special Appeals in accordance with the Maryland Rules of Procedure.

(Ord. 16-581; Ord. 17-015.)

ZONING TABLES

{PAGE LEFT INTENTIONALLY BLANK}

TABLE 7-202: OPEN-SPACE DISTRICTS – PERMITTED AND CONDITIONAL USES

USES	DISTRICTS	USE STANDARDS
	OS	
RESIDENTIAL		
Dwelling: Caretaker's	P	
INSTITUTIONAL		
Cultural Facility	CB	Per 14-308
Government Facility	P	
OPEN-SPACE		
Cemetery	CB	
Community-Managed Open-Space Farm	CB	Per 14-307
Community-Managed Open-Space Garden	P	Per 14-307
Fishing Pier	CB	
Forest and Nature Preserve	P	
Horse Stable	CB	
Marina: Recreational	CB	Per 14-323
Park or Playground	P	
Urban Agriculture	CB	Per 14-339
Zoo	CB	
COMMERCIAL		
Country Club	CO	
Driving Range	CB	
Fairground	CB	
Golf Course	CB	
Recreation: Indoor	CB	Per 14-312
Recreation: Outdoor	P	Per 14-312
Restaurant (Within Publicly-Owned Park)	CO	

	OS	
OTHER		
Parking Garage (Accessory Use)	CO	
Parking Lot (Accessory Use)	CO	Per 14-331
Telecommunications Facility	CB	Per 14-338
Utilities	CB	Per 14-340
Wireless Communications Services [1]	CB, P	Per 14-338

[1] Only Wireless Communication Services that are modifications to – and do not substantially change the physical dimension of – an existing telecommunications facility, are considered permitted uses.

(Ord. 16-581; Ord. 17-015.)

TABLE 7-203: OPEN-SPACE DISTRICTS – BULK AND YARD REGULATIONS	
CATEGORIES	**SPECIFICATIONS (FOR ALL OS DISTRICTS)**
MINIMUM LOT AREA	
Cemetery	2 acres
All Other Uses	None
MAXIMUM BUILDING HEIGHT	
Principal Structure - Private	35 feet
Principal Structure - Public	50 feet
Accessory Structure – Private or Public	20 feet (but no more than 1 story)
MINIMUM YARDS	
Front Yard	20 feet
Interior-Side Yard	25 feet
Corner-Side Yard	20 feet
Rear Yard	25 feet

(Ord. 16-581; Ord. 17-015.)

{PAGE LEFT INTENTIONALLY BLANK}

TABLE 8-301: DETACHED AND SEMI-DETACHED RESIDENTIAL DISTRICTS – PERMITTED AND CONDITIONAL USES

USES	DISTRICTS									USE STANDARDS
	R-1A	R-1B	R-1C	R-1D	R-1E	R-1	R-2	R-3	R-4	
RESIDENTIAL										
Bed and Breakfast	CB	CB	CB	CB	CB	CB	CB	CB	CB	
Day-Care Home: Adult or Child	P	P	P	P	P	P	P	P	P	Per §14-310
Dwelling: Detached	P	P	P	P	P	P	P	P	P	
Dwelling: Semi-Detached							P		P	
Home Occupation	P	P	P	P	P	P	P	P	P	Per §15-507
Residential-Care Facility	P	P	P	P	P	P	P	P	P	Per §14-334
INSTITUTIONAL										
Community Center	CB	CB	CB	CB	CB	CB	CB	CB	CB	
Cultural Facility	CB	CB	CB	CB	CB	CB	CB	CB	CB	Per §14-308
Educational Facility: Post-Secondary	CB	CB	CB	CB	CB	CB	CB	CB	CB	
Educational Facility: Primary and Secondary	CB	CB	CB	CB	CB	CB	CB	CB	CB	
Government Facility	CB	CB	CB	CB	CB	CB	CB	CB	CB	
Place of Worship	CB	CB	CB	CB	CB	CB	CB	CB	CB	Per §14-332
OPEN-SPACE										
Community-Managed ... Farm	CB	CB	CB	CB	CB	CB	CB	CB	CB	Per §14-307
Community-Managed ... Garden	P	P	P	P	P	P	P	P	P	Per §14-307
Park or Playground	P	P	P	P	P	P	P	P	P	
Urban Agriculture	CB	CB	CB	CB	CB	CB	CB	CB	CB	Per §14-339
COMMERCIAL										
Country Club	P	P	P	P	P	P	P	P	P	
Day-Care Center: Adult or Child	CB	CB	CB	CB	CB	CB	CB	CB	CB	Per §14-309
Lodge or Social Club	CB	CB	CB	CB	CB	CB	CB	CB	CB	Per §14-320

	R-1A	*R-1B*	*R-1C*	*R-1D*	*R-1E*	*R-1*	*R-2*	*R-3*	*R-4*	
OTHER										
Alternative Energy System: Community-Based [1]	CB, P	CB, P	CB, P	CB, P	CB, P	CB, P	CB, P	CB, P	CB, P	Per §14-306
Electric Substation: Enclosed, Indoor, or Outdoor	CB	CB	CB	CB	CB	CB	CB	CB	CB	Per §14-340
Telecommunications Facility	CB	CB	CB	CB	CB	CB	CB	CB	CB	Per §14-338
Utilities	CB	CB	CB	CB	CB	CB	CB	CB	CB	Per §14-340
Wireless Communications Services [2]	CB, P	CB, P	CB, P	CB, P	CB, P	CB, P	CB, P	CB, P	CB, P	Per §14-338

[1] A Community-Based Alternative Energy System: (i) if on a lot less than 0.5 acre in lot area, requires conditional-use approval by the Zoning Board, and (ii) if on a lot 0.5 acres or more in lot area, is a permitted use.

[2] Only Wireless Communication Services that are modifications to – and do not substantially change the physical dimension of – an existing telecommunications facility, are considered permitted uses.

(Ord. 16-581; Ord. 17-015.)

TABLE 8-401: DETACHED AND SEMI-DETACHED RESIDENTIAL DISTRICTS – BULK AND YARD REGULATIONS

CATEGORIES	SPECIFICATIONS (PER DISTRICT)								
	R-1A	**R-1B**	**R-1C**	**R-1D**	**R-1E**	**R-1**	**R-2**	**R-3**	**R-4**
MINIMUM LOT AREA									
Community ... Open-Space Garden or Farm	2 acres	None	None	None	None	None	None	None	None
Dwelling: Detached or Semi-Detached	2 acres	1 acre	21,780 sq.ft.	14,520 sq.ft.	9,000 sq.ft.	7,300 sq.ft.	5,000 sq.ft.	5,000 sq.ft.	3,000 sq.ft.
Park or Playground	2 acres	None	None	None	None	None	None	None	None
Urban Agriculture	2 acres	None	None	None	None	None	None	None	None
All Other Uses	2 acres	1 acre	20,000 sq.ft.	20,000 sq.ft.	20,000 sq.ft.	20,000 sq.ft.	20,000 sq.ft.	5,000 sq.ft.	3,000 sq.ft.
MINIMUM LOT WIDTH									
Dwelling: Semi-Detached	100 feet	75 feet	75 feet	60 feet	60 feet	50 feet	30 feet	45 feet	30 feet
All Other Uses	100 feet	75 feet	75 feet	60 feet	60 feet	50 feet	50 feet	45 feet	45 feet
MAXIMUM BUILDING HEIGHT									
All Uses	35 feet	35 feet	35 feet	35 feet	35 feet	35 feet	35 feet	35 feet	35 feet
MAXIMUM LOT COVERAGE									
All Uses	25%	25%	25%	25%	25%	30%	30%	35%	35%
MAXIMUM IMPERVIOUS SURFACE									
All Uses	40%	40%	40%	40%	40%	50%	50%	50%	50%
MINIMUM FRONT YARD									
All Uses [1]	40 feet	40 feet	40 feet	40 feet	30 feet	30 feet	30 feet	25 feet	25 feet

	R-1A	*R-1B*	*R-1C*	*R-1D*	*R-1E*	*R-1*	*R-2*	*R-3*	*R-4*
MINIMUM INTERIOR-SIDE YARD									
Dwelling: Detached	20 feet	20 feet	15 feet	15 feet	10 feet	10 feet	10 feet	10 feet	10 feet
Dwelling: Semi-Detached [2]	20 feet	20 feet	15 feet	15 feet	10 feet	10 feet	15 feet	10 feet	15 feet
All Other Uses	20 feet	20 feet	15 feet	15 feet	10 feet	10 feet	15 feet	10 feet	15 feet
MINIMUM CORNER-SIDE YARD									
All Uses	25 feet	25 feet	20 feet	20 feet	20 feet	20 feet	20 feet	20 feet	20 feet
MINIMUM REAR YARD									
All Uses	40 feet	40 feet	40 feet	30 feet	30 feet	30 feet	30 feet	25 feet	25 feet

---

[1] These minimums per district apply if less than 50% of the lots on the blockface have been developed. If, however, 50% or more of the lots on the blockface have been developed, the applicable minimum, for all of these districts, is the lesser of (i) the average of the front-yard depths of the improved lots or (ii) 40 feet.

[2] For semi-detached dwellings, interior-side yards are required only along the interior-side lot line where the party wall between dwellings is not located.

(Ord. 16-581; Ord. 17-015.)

TABLE 9-301: ROWHOUSE AND MULTI-FAMILY RESIDENTIAL DISTRICTS – PERMITTED AND CONDITIONAL USES

USES	DISTRICTS						USE STANDARDS
	R-5	R-6	R-7	R-8	R-9	R-10	
RESIDENTIAL							
Day-Care Home: Adult or Child	P	P	P	P	P	P	Per § 14-310
Dwelling: Detached or Semi-Detached	P	P	P	P	P	CB	
Dwelling: Multi-Family	P	P	P	P	P	P	Per § 14-327
Dwelling: Rowhouse	P	P	P	P	P	P	
Fraternity or Sorority House					CO	CO	Per § 14-313
Home Occupation	P	P	P	P	P	P	Per § 15-507
Residential-Care Facility (16 or Fewer Residents)	P	P	P	P	P	P	Per § 14-334
Residential-Care Facility (17 or More Residents)	CB	CB	CB	CB	CB	CB	Per § 14-334
Rooming House (10 or Fewer Units)				CB	CB	CB	
Rooming House (11 or More Units)					CB	CB	
INSTITUTIONAL							
Community Center	CB	CB	CB	CB	CB	CB	
Cultural Facility	CB	CB	CB	CB	CB	CB	Per § 14-308
Educational Facility: Post-Secondary	CB	CB	CB	CB	CB	CB	
Educational Facility: Primary and Secondary	P	P	P	P	P	P	
Government Facility	CB	CB	CB	CB	CB	CB	
Hospital	CB	CB	CB	CB	CB	CB	
Place of Worship	P	P	P	P	P	P	Per § 14-332

	R-5	*R-6*	*R-7*	*R-8*	*R-9*	*R-10*	
OPEN-SPACE							
Community-Managed Open-Space Farm	CB	CB	CB	CB	CB	CB	Per § 14-307
Community-Managed Open-Space Garden	P	P	P	P	P	P	Per § 14-307
Park or Playground	P	P	P	P	P	P	
Urban Agriculture	CB	CB	CB	CB	CB	CB	Per § 14-339
COMMERCIAL							
Day-Care Center: Adult or Child	CB	CB	CB	CB	CB	CB	Per § 14-309
Lodge or Social Club	CB	CB	CB	CB	CB	CB	Per § 14-320
Neighborhood Commercial Establishment	CB	CB	CB	CB	CB	CB	Per § 14-328
OTHER							
Alternative Energy System: Community-Based [1]	CB, P	CB, P	CB, P	CB, P	CB, P	CB, P	Per § 14-306
Electric Substation: Enclosed, Indoor, or Outdoor	CB	CB	CB	CB	CB	CB	Per § 14-340
Parking Garage (Principal Use)	CO	CO	CO	CO	CO	CO	Per § 14-331
Parking Lot (Principal Use)	CO	CO	CO	CO	CO	CO	Per § 14-331
Telecommunications Facility	CB	CB	CB	CB	CB	CB	Per § 14-338
Utilities	CB	CB	CB	CB	CB	CB	Per § 14-340
Wireless Communications Services [2]	CB, P	CB, P	CB, P	CB, P	CB, P	CB, P	Per § 14-338

---

[1] A Community-Based Alternative Energy System: (i) if on a lot less than 0.5 acre in lot area, requires conditional-use approval by the Zoning Board, and (ii) if on a lot 0.5 acres or more in lot area, is a permitted use.

[2] Only Wireless Communication Services that are modifications to – and do not substantially change the physical dimension of – an existing telecommunications facility, are considered permitted uses.

(Ord. 16-581; Ord. 17-015.)

TABLE 9-401: ROWHOUSE AND MULTI-FAMILY RESIDENTIAL DISTRICTS – BULK AND YARD REGULATIONS

CATEGORIES	SPECIFICATIONS (PER DISTRICT)					
	R-5	**R-6**	**R-7**	**R-8**	**R-9**	**R-10**
MINIMUM LOT AREA						
Community ... Open-Space Garden or Farm	None	None	None	None	None	None
Dwelling: Detached	3,000 sq.ft.	3,000 sq.ft.	3,000 sq.ft.	3,000 sq.ft.	3,000 sq.ft.	3,000 sq.ft.
Dwelling: Semi-Detached	2,500 sq.ft.	2,000 sq.ft.	2,000 sq.ft.	2,000 sq.ft.	2,500 sq.ft.	2,000 sq.ft.
Dwelling: Rowhouse	2,500 sq.ft.	1,500 sq.ft.	1,100 sq.ft.	750 sq.ft.	750 sq.ft.	500 sq.ft.
Dwelling: Multi-Family	2,500 sq.ft./du	1,500 sq.ft./du	1,100 sq.ft./du	750 sq.ft./du	550 sq.ft./du	200 sq.ft./du
Dwelling: Multi-Family (Age-Restricted)	1,875 sq.ft./du	1,125 sq.ft./du	825 sq.ft./du	575 sq.ft./du	550 sq.ft./du	200 sq.ft./du
Park or Playground	None	None	None	None	None	None
Residential-Care Facility	Lot area to be comparable to that for a like-sized M-FD	Lot area to be comparable to that for a like-sized M-FD	Lot area to be comparable to that for a like-sized M-FD	Lot area to be comparable to that for a like-sized M-FD	Lot area to be comparable to that for a like-sized M-FD	Lot area to be comparable to that for a like-sized M-FD
Residential-Care Facility (Age-Restricted)	Lot area to be comparable to that for a like-sized M-FD (Age-Restrctd)	Lot area to be comparable to that for a like-sized M-FD (Age-Restrctd)	Lot area to be comparable to that for a like-sized M-FD (Age-Restrctd)	Lot area to be comparable to that for a like-sized M-FD (Age-Restrctd)	Lot area to be comparable to that for a like-sized M-FD (Age-Restrctd)	Lot area to be comparable to that for a like-sized M-FD (Age-Restrctd)
Rooming House	N/A	N/A	N/A	375 sq.ft./ru	275 sq.ft./ru	100 sq.ft./ru
Urban Agriculture	None	None	None	None	None	None
All Other Uses	3,000 sq. ft.	3,000 sq. ft.	3,000 sq. ft.	3,000 sq. ft.	3,000 sq. ft.	3,000 sq. ft.
MAXIMUM BLDG HEIGHT						
Dwelling: Detached or Semi-Detached	35 feet	35 feet	35 feet	35 feet	35 feet	35 feet
Dwelling: Rowhouse	35 feet	35 feet	35 feet	35 or 45 feet [1]	35 or 45 feet [1]	35 or 45 feet [1]
Dwelling: Multi-Family	35 or 45 feet [2]	35 or 45 feet [2]	35 or 45 feet [2]	45 or 60 feet [3]	3.0 FAR	6.0 FAR
All Other Uses	35 or 45 feet [2]	35 or 45 feet [2]	35 or 45 feet [2]	45 or 60 feet [3]	45 feet	45 feet

	R-5	*R-6*	*R-7*	*R-8*	*R-9*	*R-10*
MAXIMUM LOT COVERAGE						
Dwelling: Detached or Semi-Detached	35%	35%	35%	35%	35%	35%
Dwelling: Rowhouse	40%	45%	50%	60% or 80% [4]	40%	80%
Dwelling: Multi-Family	40%	45%	70%	80%	40%	80%
All Other Uses	40%	40%	70%	70%	40%	70%
MAXIMUM IMPERVIOUS SURFACE						
Dwelling: Detached or Semi-Detached	60%	60%	60%	60%	60%	60%
Dwelling: Rowhouse (Rear Yard)	65%	65%	65%	65%	65%	65%
MINIMUM FRONT YARD						
Dwelling: Detached or Semi-Detached	Lesser of 25ft. or blockface average [5]	Lesser of 20ft. or blockface average [5]	Lesser of 20ft. or blockface average [5]	Lesser of 20ft. or blockface average [5]	Lesser of 40ft. or blockface average [5]	Lesser of 20ft. or blockface average [5]
Dwelling: Rowhouse	25 feet	20 feet	10 feet	None	25 feet	None
Dwelling: Multi-Family	25 feet	20 feet	10 feet	None	45 or 65 feet [6]	None
All Other Uses	25 feet	20 feet	10 feet	None	25 feet	None
MINIMUM INTERIOR-SIDE YARD						
Dwelling: Detached	10 feet	10 feet	10 feet	10 feet	10 feet	10 feet
Dwelling: Semi-Detached [7]	15 feet	15 feet	10 feet	10 feet	10 feet	10 feet
Dwelling: Rowhouse	None	None	None	None	None	None
Dwelling: Multi-Family	15 feet	15 feet	10 feet	10 feet	10 feet	10 feet
All Other Uses	15 feet	15 feet	15 feet	10 feet	10 feet	10 feet

	R-5	*R-6*	*R-7*	*R-8*	*R-9*	*R-10*
MINIMUM CORNER-SIDE YARD						
Dwelling: Detached or Semi-Detached	20 feet	20 feet	15 feet	15 feet	15 feet	15 feet
Dwelling: Rowhouse	20 feet	20 feet	15 feet	None	None	None
Dwelling: Multi-Family	20 feet	20 feet	15 feet	15 feet	25 feet	15 feet
All Other Uses	20 feet	20 feet	15 feet	15 feet	15 feet	15 feet
MINIMUM REAR YARD						
Dwelling: Detached or Semi-Detached	25 feet	25 feet	25 feet	25 feet	10 feet	10 feet
Dwelling: Rowhouse	25 feet	25 feet	25 feet	20 feet	10 feet	10 feet
Dwelling: Multi-Family	25 feet	25 feet	25 feet	25 feet	10 feet	10 feet
All Other Uses	25 feet	25 feet	25 feet	25 feet	10 feet	10 feet

---

[1] A height higher than 35 feet – up to a maximum of 45 feet – may only be allowed by the Zoning Board as a conditional use for: (i) a rowhouse located on an interior lot that adjoins a street right-of-way of at least 30 feet wide; or (ii) a rowhouse located on a corner lot at which each of the adjoining street rights-of-way are at least 30 feet wide.

[2] For a structure located on an interior lot, the maximum height is 35 feet. For a structure located on a corner lot at which each of the adjoining street rights-of-way are at least 30 feet wide, the maximum height is 45 feet.

[3] For a structure located on an interior lot, the maximum height is 45 feet. For a structure located on a corner lot at which each of the adjoining street rights-of-way are at least 30 feet wide, the Zoning Board may allow a height of up 60 feet as a conditional use.

[4] For a lot with a depth of 80 feet or more, the maximum lot coverage is 60%. For a lot with a depth of less than 80 feet, the maximum lot coverage is 80%.

[5] In this listing, "blockface average" means the average of the front-yard setbacks of the improved lots on the blockface.

[6] For a structure that comprises 6 or fewer stories, the minimum front-yard requirement is 45 feet. For a structure that comprises 7 or more stories, the minimum front-yard requirement is 65 feet. However, a structure designed with a courtyard is allowed a reduction of the minimum front-yard requirement, as provided in § 9-403 {"Setback reduction for courtyard design"}.

[7] For semi-detached dwellings, interior-side yards are required only along the interior-side lot line where the party wall between dwellings is not located.

(Ord. 16-581; Ord. 17-015.)

{PAGE LEFT INTENTIONALLY BLANK}

TABLE 10-301: COMMERCIAL DISTRICTS – PERMITTED AND CONDITIONAL USES

USES	DISTRICTS							USE STANDARDS
	C-1	C-1-VC	C-1-E	C-2	C-3	C-4	C-5	
RESIDENTIAL								
Day-Care Home: Adult or Child	P	P	P	P	P		P	Per § 14-310
Dwelling (Above Non-Residential Ground Floor)	P	P	P	P	P	CB	P	
Dwelling: Live-Work	P	P	P	P	P	CB	P	
Dwelling: Multi-Family	P	CB	P	P	P		P	
Dwelling: Rowhouse	P	P	P	CB	CB		P	
Dormitory							P	
Fraternity or Sorority House	CO	CO	CO	CO	CO	CO	CO	Per § 14-313
Residential-Care Facility (16 or Fewer Residents)	P	P	P	P	P		P	Per § 14-334
Residential-Care Facility (17 or More Residents)	CO	CO	CO	CO	CB		CB	Per § 14-334
Rooming House	CB	CB	CB	CB	CB		CB	
INSTITUTIONAL								
Community Center	CB	CB	CB	CB	P		P	
Cultural Facility	CB	CB	CB	CB	P		P	Per § 14-308
Educational Facility: Commercial-Vocational				CB	P	P	P	
Educational Facility: Post-Secondary	CB	CB	CB	P	P	P	P	
Educational Facility: Primary and Secondary	CB	CB	CB	CB	CB		P	
Government Facility	CB	CB	CB	CB	CB	CB	CB	
Homeless Shelter					CB	CB	CB	
Hospital				CB	CB	CB	P	
Place of Worship	P	P	P	P	P	P	P	Per § 14-332

	C-1	*C-1-VC*	*C-1-E*	*C-2*	*C-3*	*C-4*	*C-5*	
OPEN-SPACE								
Community-Managed Open-Space Farm	CB	CB	CB	CB	CB	CB	CB	Per § 14-307
Community-Managed Open-Space Garden	P	P	P	P	P	P	P	Per § 14-307
Park or Playground	P	P	P	P	P	P	P	
Marina: Dry Storage				CB	CB	P		Per § 14-323
Marina: Recreational				CB	CB	P	P	Per § 14-323
Urban Agriculture	CB	CB	CB	CB	CB	CB	CB	Per § 14-339
COMMERCIAL								
After-Hours Establishments			CB		CB	CB	CB	Per § 14-301.1
Animal Clinic	P	P	P	P	P	P	P	Per § 14-317
Art Gallery	P	P	P	P	P		P	
Arts Studio	P	P	P	P	P	P	P	
Arts Studio: Industrial				CB	CB	P	CB	
Bail Bond Establishment			CO	CO	CO	CO	CO	
Banquet Hall				CO	CB	CB	P	Per § 14-302
Body Art Establishment	CB	CB	CB	P	P	P	P	
Broadcasting Station (TV or Radio)				CB	P	P	P	
Car Wash (Fully Enclosed Structure)					P	P	CB	Per § 14-304
Car Wash (Outdoor)					CB	P		Per § 14-304
Carry-Out Food Shop	CB	CB	CB	P	P	P	P	
Check-Cashing Establishment	CO	CO	CO	CO	CO	CB	CB	
Convention Center							P	
Day-Care Center: Adult or Child	CB	CB	CB	P	P	P	P	Per § 14-309
Drive-Through Facility				CB	CB	CB		Per § 14-311
Entertainment: Indoor	CB	CB	P	P	P	P	P	Per § 14-312
Entertainment: Live			P		P	P	P	Per § 14-319
Entertainment: Live (Accessory to Restaurant, Tavern, Art Studio, or Art Gallery)	CB	CB		CB				Per § 14-319
Financial Institution	P	P	P	P	P	P	P	

Commercial (cont'd)	*C-1*	*C-1-VC*	*C-1-E*	*C-2*	*C-3*	*C-4*	*C-5*	
Funeral Home				CB	P	P		
Gas Station				CB	CB	P		Per § 14-314
Greenhouse or Nursery	P	P	P	P	P	P	CB	Per § 14-339
Health-Care Clinic	CB	CB	CB	P	P	P	P	
Health Center	P	P	P	P	P	P	P	
Heavy Sales, Rental, or Service					CB	P		
Hotel or Motel	CB	CB	CB	P	P	P	P	
Kennel					CB	P	CB	Per § 14-317
Lodge or Social Club	CB	CB	CB	CB	P	P	P	Per § 14-320
Lounge			P		P	P	P	Per § 14-321
Motor Vehicle Dealership (Fully Enclosed Structure)				P	P	P	P	Per § 14-325
Motor Vehicle Dealership (Outdoor Vehicle Display)					CB	P		Per § 14-325
Motor Vehicle Rental Establishment (Fully Enclosed Structure)	P			P	P	P	P	Per § 14-325
Motor Vehicle Rental Establishment (Outdoor Vehicle Display)					CB	P		Per § 14-325
Motor Vehicle Service and Repair: Major						P		Per § 14-326
Motor Vehicle Service and Repair: Minor (Fully Enclosed Structure)				P	P	P	P	Per § 14-326
Motor Vehicle Service and Repair: Minor (Outdoor Vehicle Storage)				CB	P	P		Per § 14-326
Nursery (*See* "Greenhouse or Nursery")	–	–	–	–	–	–	–	–
Office	P	P	P	P	P	P	P	
Outdoor Dining	P	P	P	P	P	P	P	Per § 14-329
Pawn Shop				CB	CB	CB	CB	
Personal Services Establishment	P	P	P	P	P	P	P	
Racetrack						CB		
Recreation: Indoor				P	P	P	P	Per § 14-312
Recreation: Outdoor				CB	CB	CB	CB	Per § 14-312
Recreational Vehicle Dealership					CB	P		
Restaurant	P	CB	P	P	P	P	P	

Commercial (cont'd)	*C-1*	*C-1-VC*	*C-1-E*	*C-2*	*C-3*	*C-4*	*C-5*	
Retail: Big Box Establishment					CB	CB	CB	Per § 14-335.1
Retail Goods Establishment (No Alcoholic Beverages Sales)	P	P	P	P	P	P	P	
Retail Goods Establishment (With Alcoholic Beverages Sales)	CO	CO	CO	CO	CO	P	P	Per § 14-336
Stadium						CB	CB	
Tavern	CB	CB	P	P	P	P	P	Per § 14-337
Video Lottery Facility				P			P	
INDUSTRIAL								
Food Processing: Light	CB	CB	CB	CB	CB	CB	CB	
Heliport							CB	
Helistop							CB	
Industrial: Light						P		
Mini-Warehouse					CB	P	CB [1]	
Motor Vehicle Operations Facility						P		
Movie Studio						P	P	
Printing Establishment				P	P	P	P	
Recycling Collection Station						CB		Per § 15-514
Research and Development Facility							P	
Truck Stop						CB		
OTHER								
Alternative Energy System: Community-Based	P	P	P	P	P	P	P	Per § 14-306
Electric Substation: Enclosed	CB	CB	CB	CB	CB	P	CB	Per § 14-340
Electric Substation: Indoor	P	P	P	P	P	P	P	Per § 14-340
Electric Substation: Outdoor	CB	CB	CB	CB	CB	CB	CB	Per § 14-340
Parking Garage (Principal Use)				CB	P	P	CB [2]	Per § 14-331
Parking Lot (Principal Use)	CB	CB	CB	CB	P	P	CO	Per § 14-331
Telecommunications Facility [3]	CB, P	CB, P	CB, P	CB, P	CB, P	CB, P	CB, P	Per § 14-338
Utilities	CB	CB	CB	CB	CB	CB	CB	Per § 14-340
Wireless Communications Services [4]	CB, P	CB, P	CB, P	CB, P	CB, P	CB, P	CB, P	Per § 14-338

[1] Allowed only in an existing structure.

[2] However, along Pratt Street in the C-5 District, principal-use parking garages are prohibited. *See* § 10-503(c)(1).

[3] Only telecommunications base stations that comply with the stealth design standards of § 14-338 are considered permitted uses.

[4] Only Wireless Communication Services that are modifications to – and do not substantially change the physical dimension of – an existing telecommunications facility, are considered permitted uses.

(Ord. 16-581; Ord. 17-015; Ord. 17-056.)

{PAGE LEFT INTENTIONALLY BLANK}

TABLE 10-401: COMMERCIAL DISTRICTS (C-1 TO C-4) – BULK AND YARD REGULATIONS

CATEGORIES	SPECIFICATIONS (PER DISTRICT)					
	C-1	**C-1-VC [1]**	**C-1-E**	**C-2**	**C-3**	**C-4**
MINIMUM LOT AREA						
Dwelling: Live-Work, Multi-Family, or Rowhouse	300 sq.ft	5,000 sq.ft	550 sq.ft	225 sq.ft	300 sq.ft	300 sq.ft
Residential-Care Facility (Age-Restricted)	200 sq.ft/du	200 sq.ft/du	200 sq.ft/du	120 sq.ft/du	120 sq.ft/du	120 sq.ft/du
Rooming House	None	2,500 sq.ft/ru	None	None	None	N/A
All Other Uses	None	None	None	None	None	None
MAXIMUM LOT AREA						
Restaurant	None	4,000 sq. ft.	None	None	None	None
Retail Goods Establishment (Food Store)	20,000 sq. ft.	15,000 sq. ft.	20,000 sq. ft.	None	None	None
All Other Uses	10,000 sq. ft.	2,000 sq. ft.	10,000 sq. ft.	None	None	None
MAXIMUM BLDG HEIGHT						
Dwelling: Multi-Family	60 feet	40 feet	60 feet	60 or 100 feet [2]	60 or 100 feet [2]	60 feet
Mixed-Use w/ Dwelling Above the Ground Floor	60 feet	40 feet	60 feet	60 or 100 feet [2]	60 or 100 feet [2]	60 feet
Residential Care Facility (Elderly)	60 feet	40 feet	60 feet	60 or 100 feet [2]	60 or 100 feet [2]	60 feet
All Other Uses	40 feet	40 feet	40 feet	60 feet	60 feet	60 feet
MINIMUM BLDG HEIGHT						
All Uses	20 feet	None	20 feet	20 feet	20 feet	None
MAXIMUM FLOOR AREA RATIO						
All Uses	None	0.8	None	None	None	None

	C-1	*C-1-VC* [1]	*C-1-E*	*C-2*	*C-3*	*C-4*
MINIMUM / MAXIMUM FRONT YARD						
All Uses	No front yard required but, if one is provided, it may not exceed 5 feet	20 feet	No front yard required but, if one is provided, it may not exceed 5 feet	No front yard required but, if one is provided, it may not exceed 5 feet	None	None [3]
MINIMUM INTERIOR-SIDE YARD						
All Uses	No interior-side yard required but, if one is provided, it must be a minimum of 10 feet	No interior-side yard required but, if one is provided, it must be a minimum of 10 feet	No interior-side yard required but, if one is provided, it must be a minimum of 10 feet	No interior-side yard required but, if one is provided, it must be a minimum of 10 feet	No interior-side yard required but, if one is provided, it must be a minimum of 10 feet	None [4]
MINIMUM CORNER-SIDE YARD						
All Uses	For 1st 25 ft. from front lot line: Where structure is to be located, must build to corner-side lot line. After 1st 25 ft.: No yard requirement.	For 1st 25 ft. from front lot line: Where structure is to be located, must build to corner-side lot line. Minimum setback of 25 ft.	For 1st 25 ft. from front lot line: Where structure is to be located, must build to corner-side lot line. After 1st 25 ft.: No yard requirement.	None	None	None [5]
MINIMUM REAR YARD						
All Uses	If rear yard abuts an alley: None. Otherwise: 20 ft.	30 feet	If rear yard abuts an alley: None. Otherwise: 20 ft.	If rear yard abuts an alley: None. Otherwise: 20 ft.	20 feet	20 feet

---

[1] In the C-1-VC District, no change to an existing setback or yard may be made unless approved by the Board as a variance.

[2] For a structure that contains dwellings above a non-residential use, a height of up to 100 feet may be allowed by the Board as a conditional use. Otherwise, the maximum height is 60 feet.

[3] All outdoor storage areas and parking areas must be set back 10 feet from the front lot line.

[4] However, if the interior-side lot line abuts a Residential Zoning District or an Office-Residential Zoning District, a minimum interior-side yard of 10 feet is required.

[5] All outdoor storage areas must be set back 10 feet from the corner-side lot line and the front lot line.

(Ord. 16-581; Ord. 17-015.)

TABLE 10-401: COMMERCIAL DISTRICTS (C-5) – BULK AND YARD REGULATIONS

CATEGORIES	SPECIFICATIONS (PER SUBDISTRICT)						
	C-5-DC	C-5-IH	C-5-DE	C-5-HT	C-5-TO	C-5-HS	C-5-G
MAXIMUM BLDG HEIGHT							
All Uses	None	100 feet	125 feet	80 feet	175 feet	175 feet	80 feet
MINIMUM BLDG HEIGHT							
All Uses	36 feet	None	36 feet	36 feet	36 feet	36 feet	36 feet
MINIMUM FRONT YARD							
All Uses	Build to front lot line [1]	None	Build to front lot line [1]	Build to front lot line [1]	Build to front lot line [1]	Build to front lot line [1]	Build to front lot line [1]
MINIMUM INTERIOR-SIDE YARD							
All Uses	None	None	None	None	None	None	None
MINIMUM CORNER-SIDE YARD							
All Uses	Build to corner-side lot line [2]	None	Build to corner-side lot line [2]	Build to corner-side lot line [2]	Build to corner-side lot line [2]	Build to corner-side lot line [2]	Build to corner-side lot line [2]
MINIMUM REAR YARD							
All Uses	None	None	None	None	None	None	None

---

[1] However, a front yard may be allowed by the Zoning Board as a conditional use.

[2] However, a corner-side yard may be allowed by the Zoning Board as a conditional use.

(Ord. 16-581; Ord. 17-015.)

{PAGE LEFT INTENTIONALLY BLANK}

TABLE 11-301: INDUSTRIAL DISTRICTS – PERMITTED AND CONDITIONAL USES

USES	DISTRICTS						USE STANDARDS
	OIC	BSC	I-MU	I-1	I-2	MI	
RESIDENTIAL							
Dwelling (Above Non-Residential Ground Floor)		P	P				
Dwelling: Live-Work			P	CB			
Dwelling: Multi-Family		P	P				
Dwelling: Rowhouse		P					
Residential-Care Facility (16 or Fewer Residents)		P	P				Per § 14-334
Residential-Care Facility (17 or More Residents)		CB	CB				Per § 14-334
INSTITUTIONAL							
Cultural Facility			CB				Per § 14-308
Educational Facility: Commercial-Vocational	P	P	P	P	CB	CB	
Educational Facility: Post-Secondary	CB	CB	CB				
Educational Facility: Primary and Secondary		P	P				
Government Facility	P	P	P	P	P	P	
Homeless Shelter			CO				
Hospital		P	CO				
OPEN-SPACE							
Community-Managed Open-Space Farm	CB	CB	CB				Per § 14-307
Community-Managed Open-Space Garden	P	P	P				Per § 14-307
Park or Playground	P	P	P				
Urban Agriculture	P	P	P	P			Per § 14-339

	OIC	*BSC*	*I-MU*	*I-1*	*I-2*	*MI*	
COMMERCIAL							
Animal Clinic			P	P			Per § 14-317
Art Gallery			P				
Arts Studio			P				
Arts Studio: Industrial	P		P	P			
Banquet Hall	CB						Per § 14-302
Body Art Establishment			P				
Broadcasting Station (TV or Radio)	P		P	P			
Car Wash				P	P		Per § 14-304
Carry-Out Food Shop		P	P	CB	CB		
Day-Care Center: Adult or Child	P	P	P	P [1]	P [1]	P [1]	Per § 14-309
Drive-Through Facility	CB						Per § 14-311
Entertainment: Indoor		P	P				Per § 14-312
Entertainment: Live			CB				Per § 14-319
Entertainment: Live (Accessory to Restaurant, Tavern, Art Studio, or Art Gallery)		CB					Per § 14-319
Financial Institution	P [2]	P	P				
Gas Station				CB	CB		Per § 14-314
Greenhouse		P	P	P			Per § 14-339
Health-Care Clinic	P	P	P				
Heavy Sales, Rental, or Service			CO	CB			
Hotel or Motel	P	P	CB				
Kennel			CB	P			Per § 14-317
Lodge or Social Club			P	CB	CB	CB	Per § 14-320
Motor Vehicle Service and Repair: Minor			CO	CO			Per § 14-326
Nursery		P	P	P			Per § 14-339
Office	P	P	P	CB [2, 3]	CB [2, 3]	CB [2, 3]	

Commercial (cont'd)	*OIC*	*BSC*	*I-MU*	*I-1*	*I-2*	*MI*	
Outdoor Dining		P	P				Per § 14-329
Personal Services Establishment	P [2]	P	P	CB			
Recreation: Indoor		P	P				Per § 14-312
Recreation: Outdoor			CB				Per § 14-312
Restaurant	P [2]	P	P	CB	CB		
Retail Goods Establishment (No Alcoholic Beverages Sales)	CB	P	P	CB			
Retail Goods Establishment (With Alcoholic Beverages Sales)		P	CO	CB			Per § 14-336
Tavern		P	CO	CB	CB		Per § 14-337
Truck Repair				P	P		
INDUSTRIAL							
Alternative Energy System: Commercial	P	P	P	P	P		
Boat Manufacturing, Repair, and Sales			CB	P	P	CB	Per § 14-303
Commercial Composting Facility				CB	P		Per § 14-305
Contractor Storage Yard				P	P		Per § 14-330
Food Processing: Light	P		P	P			
Freight Terminal				P	P	P	
Heliport		CB		CB	CB		
Helistop		CB		CB	CB		
Industrial Boat Repair Facility					P	P	Per § 14-323
Industrial: General					P	CB	Per § 14-315
Industrial: Light	P	P	P	P	P		
Industrial: Maritime-Dependent					P	P	
Landfill: Industrial					CB		Per § 14-318
Marina: Dry Storage			CB	P	P		Per § 14-323
Marine Terminal					P	P	
Materials Recovery Facility					P		Per § 14-324
Mini-Warehouse			P	P			

Industrial (cont'd)	*OIC*	*BSC*	*I-MU*	*I-1*	*I-2*	*MI*	
Motor Vehicle Operations Facility				P	P		
Movie Studio	P		P	P	P		
Outdoor Storage Yard				P	P	P	Per § 14-330
Passenger Terminal			P	P	P	P	
Recyclable Materials Recovery Facility				P	P		Per § 14-333
Recycling Collection Station				CB	CB		Per § 15-514
Recycling and Refuse Collection Facility				P	P		
Research and Development Facility	P	P	P	P	P	P	
Resource Recovery Facility					CB		Per § 14-335
Shipyard					P	P	
Truck Stop				P	P		
Truck Terminal				P	P		
Warehouse	P		P	P	P	P	
Waterfreight Terminal					P	P	
Wholesale Goods Establishment	P		P	P	P		
OTHER							
Alternative Energy System: Community-Based	P	P	P	P	P	P	Per § 14-306
Electric Substation: Enclosed or Indoor	P	P	P	P	P	P	Per § 14-340
Electric Substation: Outdoor	CB	CB	CB	CB	P	P	Per § 14-340
Parking Garage (Principal Use)	P	P	CO	P	P	P	Per § 14-331
Parking Lot (Principal Use)	P	P	CO	P	P	P	Per § 14-331
Telecommunications Facility [4]	CB, P	CB, P	CB, P	CB, P	CB, P	CB, P	Per § 14-338
Utilities	CB	CB	CB	CB	CB	CB	Per § 14-340
Wireless Communications Services [5]	CB, P	CB, P	CB, P	CB, P	CB, P	CB, P	Per § 14-338

[1] Allowed only when (i) accessory to an office structure, research and development facility, or industrial use, and (ii) integrated into that structure, facility, or use to serve its employees.

[2] Allowed only when secondary to a primary industrial use.

[3] Office uses legally established as of the effective date of this Code are deemed conforming and are not required to be secondary to a primary industrial use.

[4] Only telecommunications base stations that comply with the stealth design standards of § 14-338 are considered permitted uses.

[5] Only Wireless Communication Services that are modifications to – and do not substantially change the physical dimension of – an existing telecommunications facility, are considered permitted uses.

(Ord. 16-581; Ord. 17-015.)

{PAGE LEFT INTENTIONALLY BLANK}

TABLE 11-401: INDUSTRIAL DISTRICTS – BULK AND YARD REGULATIONS

CATEGORIES	SPECIFICATIONS (PER DISTRICT)					
	OIC	**BSC**	**I-MU**	**I-1**	**I-2**	**MI**
MINIMUM LOT AREA						
Dwelling: Live-Work, Multi-Family, or Rowhouse	N/A	300 sq.ft.	300 sq. ft.	10,000 sq. ft.	N/A	N/A
All Other Uses	None	None	5,000 sq. ft.	10,000 sq. ft.	20,000 sq. ft.	20,000 sq. ft.
MAXIMUM BLDG HEIGHT						
All Uses	60 feet	150 feet [1]	60 feet	60 feet	None [2]	None [2]
MINIMUM FRONT YARD						
All Uses	None	None	None [3]	10 feet	10 feet	10 feet
MINIMUM INTERIOR-SIDE YARD						
All uses	None [4]	None [4]	No interior-side yard required but, if one is provided, it must be a minimum of 10 feet	None [5]	None [6]	None [6]
MINIMUM CORNER-SIDE YARD						
All Uses	None	None	None [7]	10 feet	10 feet	10 feet
MINIMUM REAR YARD						
All Uses	None [8]	None [8]	None [8]	None [9]	None [9]	None [9]
BUFFER YARD REQ'T						
All Uses	None	None	Where the Landscape Manual requires a landscaped buffer yard between an industrial use and a non-industrial use, that buffer yard must be provided by the more recent use.			

---

[1] For a residential use, the Zoning Board may allow a height higher than 150 feet as a conditional use.

[2] However, if any part of the building is within 50 feet of an R, OR, C-1, C -1-E, C-1-VC, C-2, or C-3 Zoning District, that part of the building is limited to a maximum height of 60 feet.

[3] All outdoor storage areas must be set back 10 feet from the front lot line.

[4] However, if the interior-side lot line abuts an R Zoning District, a minimum interior-side yard of 10 feet is required.

[5] However, if the interior-side lot line abuts an R or OR Zoning District, a minimum interior-side yard of 10 feet is required.

[6] However, if the interior-side lot line abuts an R, OR, C-1, C -1-E, C-1-VC, C-2, or C-3 Zoning District, a minimum interior-side yard of 20 feet is required.

[7] All outdoor storage areas must be set back 10 feet from the corner-side lot line and the front lot line.

[8] However, if the rear lot line abuts an R Zoning District, a minimum rear yard of 15 feet is required.

[9] However, if the rear lot line abuts an R, OR, C-1, C -1-E, C-1-VC, C-2, or C-3 Zoning District, a minimum interior rear yard of 30 feet is required.

(Ord. 16-581; Ord. 17-015.)

TABLE 12-301: OFFICE-RESIDENTIAL DISTRICTS – PERMITTED AND CONDITIONAL USES

USES	DISTRICTS	USE STANDARDS
	OR	
RESIDENTIAL		
Bed and Breakfast	CB	
Day-Care Home: Adult or Child	P	Per §14-310
Dwelling: Detached	P	
Dwelling: Semi-Detached	P	
Dwelling: Multi-Family	P	Per § 14-327
Dwelling: Rowhouse	P	
Fraternity or Sorority House	CO	Per § 14-313
Residential-Care Facility (16 or Fewer Residents)	P	Per § 14-334
Residential-Care Facility (17 or More Residents)	CO	Per § 14-334
Rooming House	CO	
INSTITUTIONAL		
Cultural Facility	P	Per 14-308
Educational Facility: Primary and Secondary	P	
Government Facility	CB	
Place of Worship	P	Per § 14-332
OPEN-SPACE		
Community-Managed Open-Space Farm	CB	Per § 14-307
Community-Managed Open-Space Garden	P	Per § 14-307
Park or Playground	P	
Urban Agriculture	CB	Per § 14-339

COMMERCIAL		
Broadcasting Station (TV or Radio)	CB	
Health-Care Clinic	P	
Lodge or Social Club	CB	Per § 14-320
Neighborhood Commercial Establishment [1]	CB, P	Per § 14-328
Office	P	
OTHER		
Electric Substation: Enclosed, Indoor, or Outdoor	CB	Per § 14-340
Parking Garage (Principal Use)	CB	Per § 14-331
Parking Lot (Principal Use)	CB	Per § 14-331
Telecommunications Facility [2]	CB, P	Per § 14-338
Utilities	CB	Per § 14-340
Wireless Communications Services [3]	CB, P	Per § 14-338

---

[1] A Neighborhood Commercial Establishment is a permitted use only if: (i) the structure has 50 or more dwelling units; and (ii) non-residential uses are limited to 10% of the structure's gross floor area.

[2] Only telecommunications base stations that comply with the stealth design standards of § 14-338 are considered permitted uses.

[3] Only Wireless Communication Services that are modifications to – and do not substantially change the physical dimension of – an existing telecommunications facility, are considered permitted uses.

(Ord. 16-581; Ord. 17-015.)

TABLE 12-302: OFFICE-RESIDENTIAL DISTRICTS – BULK AND YARD REGULATIONS

CATEGORIES	SPECIFICATIONS (PER SUBDISTRICT)	
	OR-1	**OR-2**
MINIMUM LOT AREA		
Dwelling: Multi-Family	550 sq.ft./du	200 sq.ft./du
All Other Uses	None	None
MAXIMUM BLDG HEIGHT		
All Uses	40 or 60 feet [1]	100 feet
MINIMUM FRONT YARD		
All Uses	None	None
MINIMUM INTERIOR-SIDE YARD		
All Uses	No interior-side yard required but, if one is provided, it must be a minimum of 10 feet	No interior-side yard required but, if one is provided, it must be a minimum of 10 feet
MINIMUM CORNER-SIDE YARD		
All Uses	10 feet	None
MINIMUM REAR YARD		
All Uses	10 feet	10 feet

[1] A height higher than 40 feet – up to a maximum of 60 feet – may only be allowed by the Zoning Board as a conditional use.

(Ord. 16-581; Ord. 17-015.)

{PAGE LEFT INTENTIONALLY BLANK}

TABLE 12-402: TRANSIT-ORIENTED DEVELOPMENT DISTRICTS – PERMITTED AND CONDITIONAL USES

USES	DISTRICTS				USE STANDARDS
	TOD-1	TOD-2	TOD-3	TOD-4	
RESIDENTIAL					
Dwelling (Above Non-Residential Ground Floor)	P	P	P	P	
Dwelling: Multi-Family	P	P	P	P	Per § 14-327
Dwelling: Rowhouse	P	P	P	P	
Residential-Care Facility (16 or Fewer Residents)	P	P	P	P	Per § 14-334
Residential-Care Facility (17 or More Residents)	CB	CB	CB	CB	Per § 14-334
INSTITUTIONAL					
Community Center	P	P	P	P	
Cultural Facility	CB	CB	CB	P	Per § 14-308
Educational Facility: Commercial-Vocational	P	P	P	P	
Educational Facility: Post-Secondary	P	P	P	P	
Educational Facility: Primary and Secondary	P	P	P	P	
Government Facility	CB	CB	CB	CB	
Homeless Shelter	P	CB	P	CB	
Place of Worship		P		P	Per § 14-332
OPEN-SPACE					
Community ... Open-Space Garden or Farm	P	P	P	P	
Park or Playground (Passive Recreation Only) [1]		P		P	

	TOD-1	*TOD-2*	*TOD-3*	*TOD-4*	
COMMERCIAL					
Animal Clinic	P		P	P	Per § 14-317
Art Gallery	P	P	P	P	
Arts Studio		P		P	
Banquet Hall		CO		CO	Per § 14-302
Day-Care Center: Adult or Child	P	P	P	P	Per § 14-309
Entertainment: Indoor		P		P	Per § 14-312
Entertainment: Live		CB		CB	Per § 14-319
Financial Institution		P		P	
Health-Care Clinic	P	P	P	P	
Health Center	P	P	P	P	
Hotel or Motel		P		P	
Kennel				CB	Per § 14-317
Lodge or Social Club		CO		CO	Per § 14-320
Office	P	P	P	P	
Outdoor Dining	P	P	P	P	
Personal Services Establishment	P	P	P	P	Per § 14-329
Recreation: Indoor		P		P	Per § 14-312
Restaurant	P [2]	P	P [2]	P	
Retail Goods Establishment (No Alcoholic Beverages Sales)	P [2]	P	P [2]	P	
Retail Goods Establishment (With Alcoholic Beverages Sales)		P		P	Per § 14-336
Tavern	CB	P	CB	P	Per § 14-337

	TOD-1	*TOD-2*	*TOD-3*	*TOD-4*	
OTHER					
Electric Substation: Enclosed, Indoor, or Outdoor	CB	CB	CB	CB	Per § 14-340
Parking Garage (Principal Use)	CB	CB	CB	CB	Per § 14-331
Parking Lot (Principal Use)	CB	CB	CB	CB	Per § 14-331
Telecommunications Facility [3]	CB, P	CB, P	CB, P	CB, P	Per § 14-338
Utilities	CB	CB	CB	CB	Per § 14-340
Wireless Communications Services [4]	CB, P	CB, P	CB, P	CB, P	Per § 14-338

[1] No recreation facilities are allowed, except for standard playground equipment and outdoor furniture.

[2] Not to exceed 5,000 sq. ft. of the structure's gross floor area.

[3] Only telecommunications base stations that comply with the stealth design standards of § 14-338 are considered permitted uses.

[4] Only Wireless Communication Services that are modifications to – and do not substantially change the physical dimension of – an existing telecommunications facility, are considered permitted uses.

(Ord. 16-581; Ord. 17-015.)

{PAGE LEFT INTENTIONALLY BLANK}

TABLE 12-403: TRANSIT-ORIENTED DEVELOPMENT DISTRICTS – BULK AND YARD REGULATIONS

CATEGORIES	SPECIFICATIONS (PER DISTRICT)			
	TOD-1	**TOD-2**	**TOD-3**	**TOD-4**
MINIMUM LOT AREA				
Dwelling: Multi-Family	300 sq.ft/du	None	300 sq.ft/du	None
All Other Uses	None	None	None	None
MAXIMUM BUILDING HEIGHT				
All Uses	60 feet and no more than 5 stories	60 feet and no more than 5 stories [1]	100 feet [2]	100 feet [2]
MINIMUM BUILDING HEIGHT				
All Uses	24 feet and no less than 2 stories	24 feet and no less than 2 stories	24 feet and no less than 2 stories	24 feet and no less than 2 stories
MINIMUM / MAXIMUM FRONT YARD				
All Uses	No front yard required but, if one is provided, it may not exceed 5 feet [3]	No front yard required but, if one is provided, it may not exceed 5 feet [3]	No front yard required but, if one is provided, it may not exceed 5 feet [3]	No front yard required but, if one is provided, it may not exceed 5 feet [3]
MINIMUM INTERIOR-SIDE YARD				
All Uses	None	None	None	None
MINIMUM CORNER-SIDE YARD				
All Uses	None	None	None	None
MAXIMUM REAR YARD				
All Uses	15 feet	15 feet	None	None

---

[1] A higher height – up to a maximum of 100 feet – may be allowed by the Zoning Board as a conditional use.

[2] A higher height may be allowed by the Zoning Board as a conditional use.

[3] However, the front yard may be increased to the extent needed to accommodate a courtyard, plaza, or seating area adjacent to the public street.

(Ord. 16-581; Ord. 17-015.)

{PAGE LEFT INTENTIONALLY BLANK}

TABLE 12-501: EDUCATIONAL CAMPUS DISTRICTS – PERMITTED AND CONDITIONAL USES

USES	DISTRICTS		USE STANDARDS
	EC-1	EC-2	
RESIDENTIAL			
Dormitory (Ancillary to Educational Facility)	P	P	
Dwelling (Ancillary to Educational Facility)	P	P	Per § 14-327
Fraternity or Sorority House		P	Per § 14-313
Rooming House (Ancillary to Educational Facility)		CB	
INSTITUTIONAL			
Community Center (Ancillary to Educational Facility)		CB	
Cultural Facility (Ancillary to Educational Facility)		CB	Per § 14-308
Educational Facility: Commercial-Vocational		P	
Educational Facility: Post-Secondary		P	
Educational Facility: Primary and Secondary	P	P	
Place of Worship	P	P	Per § 14-332
OPEN-SPACE			
Community-Managed Open-Space Farm	CB	CB	Per § 14-307
Community-Managed Open-Space Garden	P	P	Per § 14-307
Park or Playground	P	P	
Urban Agriculture	P	P	Per § 14-339
COMMERCIAL			
Broadcasting Station (TV or Radio)		P	
Carry-Out Food Shop		P	
Day-Care Center: Adult or Child	P	P	Per § 14-309
Entertainment: Indoor		P	Per § 14-312

Commercial (cont'd)	***EC-1***	***EC-2***	
Office	P	P	
Personal Services Establishment		P	
Recreation: Indoor or Outdoor (Ancillary to Educational Facility)	P	P	Per § 14-312
Restaurant		P	
Retail Goods Establishment (No Alcoholic Beverages Sales)		P	
Stadium (Ancillary to Educational Facility)		CB	
INDUSTRIAL			
Research and Development Facility		P	
OTHER			
Electric Substation: Enclosed, Indoor, or Outdoor	CB	CB	Per § 14-340
Parking Garage (Principal Use)	P	P	Per § 14-331
Parking Lot (Principal Use)	P	P	Per § 14-331
Telecommunications Facility [1]	CB, P	CB, P	Per § 14-338
Utilities	CB	CB	Per § 14-340
Wireless Communications Services [2]	CB, P	CB, P	Per § 14-338

---

[1] Only telecommunications base stations that comply with the stealth design standards of § 14-338 are considered permitted uses.

[2] Only Wireless Communication Services that are modifications to – and do not substantially change the physical dimension of – an existing telecommunications facility, are considered permitted uses.

(Ord. 16-581; Ord. 17-015.)

TABLE 12-502: EDUCATIONAL CAMPUS DISTRICTS – BULK AND YARD REGULATIONS

CATEGORIES	SPECIFICATIONS (PER DISTRICT)	
	EC-1	**EC-2**
MAXIMUM BLDG HEIGHT		
All Uses	35 feet	65 feet
MAXIMUM FLOOR AREA RATIO		
All uses	0.8	None
MINIMUM FRONT YARD		
All Uses	None [1]	None [2]
MINIMUM INTERIOR-SIDE YARD		
All Uses	None [3]	None [4]
MINIMUM CORNER-SIDE YARD		
All Uses	None [5]	None [6]
MINIMUM REAR YARD		
All Uses	None [7]	None [8]

[1] However, if the front lot line abuts any other zoning district (including another EC District), a minimum front yard of 40 feet is required.

[2] However, if the front lot line abuts any other zoning district (including another EC District), a minimum front yard of 20 feet is required.

[3] However, if the interior-side lot line abuts a Residential Zoning District, a minimum interior-side yard of 20 feet is required.

[4] However, if the interior-side lot line abuts a Residential Zoning District, a minimum interior-side yard of 10 feet is required.

[5] However, if the corner-side lot line abuts any other zoning district (including another EC District), a minimum corner-side yard of 20 feet is required.

[6] However, if the corner-side lot line abuts any other zoning district (including another EC District), a minimum corner-side yard of 20 feet is required.

[7] However, if the rear lot line abuts a Residential Zoning District, a minimum rear yard of 40 feet is required.

[8] However, if the rear lot line abuts a Residential Zoning District, a minimum rear yard of 15 feet is required.

(Ord. 16-581; Ord. 17-015.)

{PAGE LEFT INTENTIONALLY BLANK}

TABLE 12-601: HOSPITAL CAMPUS DISTRICTS – PERMITTED AND CONDITIONAL USES

USES	DISTRICTS	USE STANDARDS
	H	
RESIDENTIAL		
Dormitory (Ancillary to Hospital or Educational Facility: Post-Secondary)	P	
Dwelling (Ancillary to Hospital or Educational Facility: Post-Secondary)	P	
Residential-Care Facility	P	Per §14-334
Rooming House	CB	
INSTITUTIONAL		
Community Center (Ancillary to Educational Facility: Post-Secondary)	CB	
Cultural Facility (Ancillary to Educational Facility: Post-Secondary)	CB	Per § 14-308
Educational Facility: Post-Secondary	P	
Hospital	P	
Place of Worship	P	Per §14-332
COMMERCIAL		
Carry-Out Food Shop	P	
Day-Care Center: Adult or Child	P	Per §14-309
Health-Care Clinic	P	
Health Center	P	
Helistop	CB	
Hotel or Motel	CB	
Office	P	
Personal Services Establishment	P	

Commercial (cont'd)	*H*	
Recreation: Indoor and Outdoor (Ancillary to Hospital or Educational Facility: Post-Secondary)	P	Per §14-312
Restaurant	P	
Retail Goods Establishment (No Alcoholic Beverages Sales)	P	
INDUSTRIAL		
Research and Development Facility	P	
OTHER		
Electric Substation: Enclosed, Indoor, or Outdoor	CB	Per § 14-340
Parking Garage (Principal Use)	P	Per § 14-331
Parking Lot (Principal Use)	P	Per § 14-331
Telecommunications Facility [1]	CB, P	Per § 14-338
Utilities	CB	Per § 14-340
Wireless Communications Services [2]	CB, P	Per § 14-338

---

[1] Only telecommunications base stations that comply with the stealth design standards of § 14-338 are considered permitted uses.

[2] Only Wireless Communication Services that are modifications to – and do not substantially change the physical dimension of – an existing telecommunications facility, are considered permitted uses.

(Ord. 16-581; Ord. 17-015.)

TABLE 12-602: HOSPITAL CAMPUS DISTRICTS – BULK AND YARD REGULATIONS

CATEGORIES	SPECIFICATIONS (FOR ALL HC DISTRICTS)
MAXIMUM BUILDING HEIGHT	
Adjacent to a Residential Zoning District (other than R-9 and R-10)	40 feet [1]
Adjacent to an R-9, R-10, or a C-1 to C-4 Zoning District	65 feet [1]
Adjacent to any other Zoning District	150 feet or, if higher, up to the height of the tallest structure existing on the campus as of June 5, 2017.
MINIMUM FRONT YARD	
All Uses	None
MINIMUM INTERIOR-SIDE YARD	
All Uses	None [2]
MINIMUM CORNER-SIDE YARD	
All Uses	None
MINIMUM REAR YARD	
All Uses	None [3]

[1] The structure may then rise at an angle of 45 degrees to a maximum of 150 feet.

[2] However, if the interior-side lot line abuts a Residential Zoning District, a minimum interior-side yard of 10 feet is required.

[3] However, if the rear lot line abuts a Residential Zoning District, a minimum rear yard of 15 feet is required.

(Ord. 16-581; Ord. 17-015.)

{PAGE LEFT INTENTIONALLY BLANK}

TABLE 12-903(1): CANTON WATERFRONT AREA

-

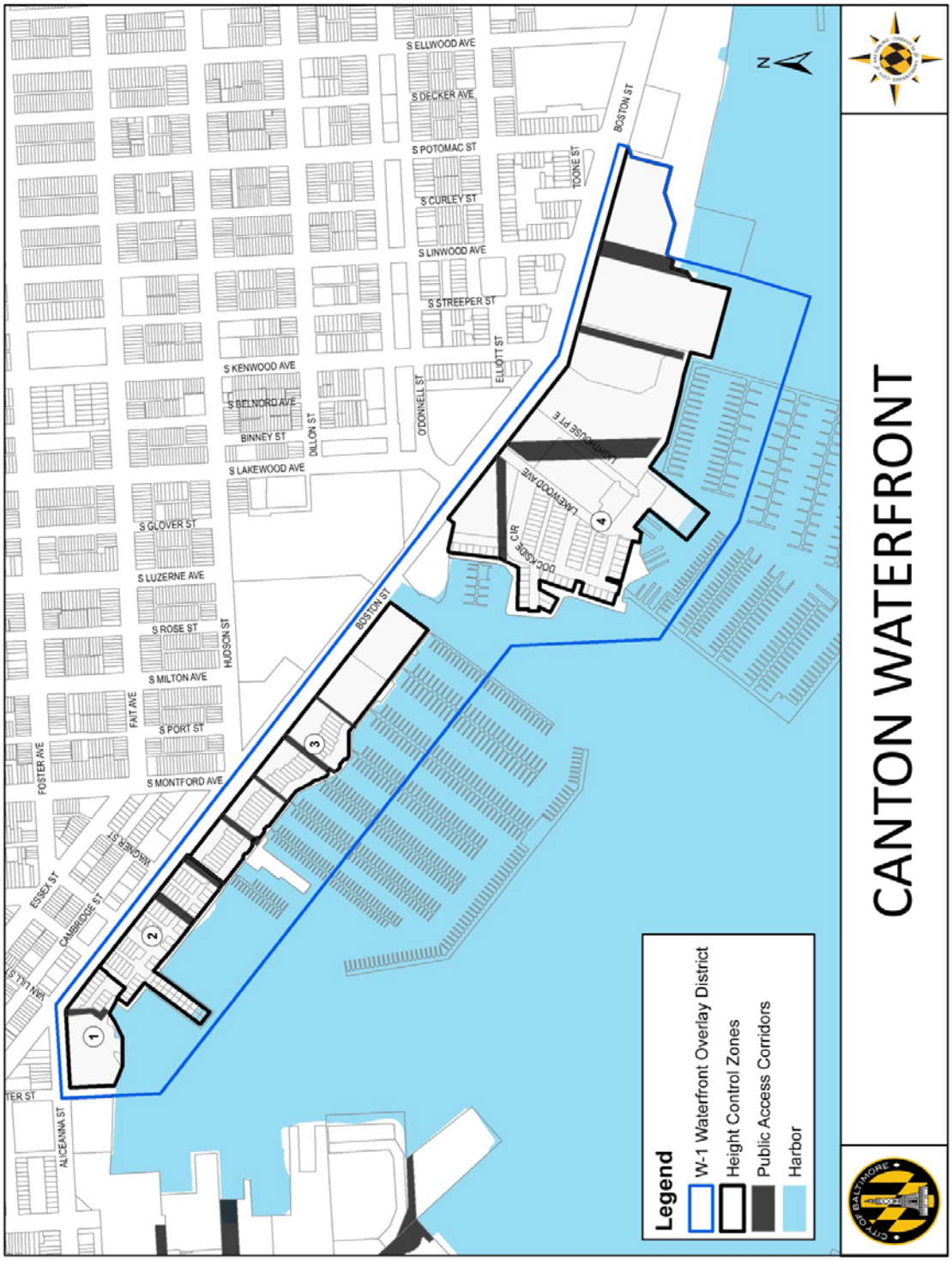

Height Limitations - The height of structures along the waterfront may not exceed 35 feet, except in Areas 1 through 4. Height controls are provided in Areas 1 through 4 to minimize the impact of building heights on adjacent neighborhoods. Specific locations for higher buildings are provided, as well as guidelines for building setbacks and stepbacks. The maximum building height shall be defined as the vertical distance measured, in the case of flat roofs, from the mean curb level of the highest point of the roof adjacent to the street wall, and in the case of pitched roofs, from the mean curb level to the mean height level of the roof. Where the walls of a building are not adjacent to a street curb, the height of a building shall be measured from the average elevation of the ground adjoining the walls.

AREA	HEIGHT LIMITATIONS
1	Average height of the built area may not exceed 45 feet. Maximum building height shall be 50 feet. Maximum building height along Aliceanna Street, Chester Street, and the water's edge shall be 40 feet. Additional height above 40 feet up to the maximum of 50 feet shall be constructed so that it is not visible from that portion of the promenade adjacent to the area or shall step up at an angle of no more than 45 degrees. The building shall be setback a minimum of 20 feet from the Chester Street right-of-way.
2	Average height of the built area may not exceed 65 feet. Maximum height, excluding HVAC or other mechanical systems, is 75 feet. Maximum height for the HVAC and other mechanical systems may not exceed 90 feet. The maximum building height on Boston Street, the northwest and the water's edge shall be 60 feet. Additional height above 60 feet up to the maximum of 75 feet shall be constructed so it is not visible from that portion of the promenade adjacent to the area and from the sidewalk on the north side of Boston Street adjacent to the area or shall step up at an angle of no more than 45 degrees.
3	The water's edge shall have a maximum height of 40 feet. Additional height above 40 feet up to a maximum height no higher than the existing properties at 2351- 2439 Boston Street shall be constructed so that it is not visible from that portion of the promenade adjacent to the area or shall step up at an angle of no more than 45 degrees.
4	Average height of the built area may not exceed 50 feet. Maximum height is 79 feet. The water's edge shall have a maximum height of 40 feet. Additional height above 40 feet shall be setback at an angle of no more than 45 degrees up to 79 feet.

Public Access Corridors - Minimum width of the corridors shall be 50 feet, unless otherwise noted below. Landscaping, trees, lights, benches, tables, and other public amenities that will enhance, not impede, public view of the water shall be permitted. All access corridors should connect sidewalk and promenade and be physically and visually uninterrupted. In cases where a public access corridor is to be located between 2 properties, the center of the corridor shall be on the property line and the width of the corridor shall be evenly divided between the 2 properties.

CORRIDOR	LOCATION
1	From a point at the approximate intersection of Boston and Aliceanna Streets south to the water between 2201 and 2121 Boston Street.
2	A 30 foot wide public access corridor shall be designated between 2301 Boston Street (North shore) and 2351 Boston Street (Anchorage Townhomes), consisting of a 15 foot wide public access corridor each on 2301 Boston Street and 2351 Boston Street.
3	A 15-foot wide public access corridor shall be designated between 2369 and 2371, between 2389 and 2401, and between 2419 and 2421 Boston Street.
4	A 30-foot wide public access corridor shall be designated between 2439 and 2449 Boston Street.
5	From a point at the approximate intersection of Luzerne Avenue and Hudson Street due south along the axis of Luzerne Avenue to the waterfront park. In the Luzerne Avenue corridor, if financially necessary and subject to the review and approval of the Commissioner of Housing and Community Development, a second level pedestrian bridge may be allowed.
6	From a point at the approximate intersection of Lakewood Avenue and Boston Street due south along the axis of Lakewood Avenue through to the water.
7	From a point at the approximate intersection of Kenwood Avenue and Boston Street along the axis of the existing 2809 Boston Street approximately southwest to the water.
8	From a point at the approximate intersection of Linwood Avenue and Boston Street along the axis of the existing 2809 Boston Street approximately southwest to the water.
9	This public access corridor shall be described by a set of parallel lines. The northern line shall extend west from the intersection of Elliott Street and Kenwood Avenue along the north axis of Elliott Street to the water; the southern will be parallel and 50 feet south of the above line.

(Ord. 16-581; Ord. 17-015.)

{PAGE LEFT INTENTIONALLY BLANK}

TABLE 12-903(2): FELLS POINT WATERFRONT AREA

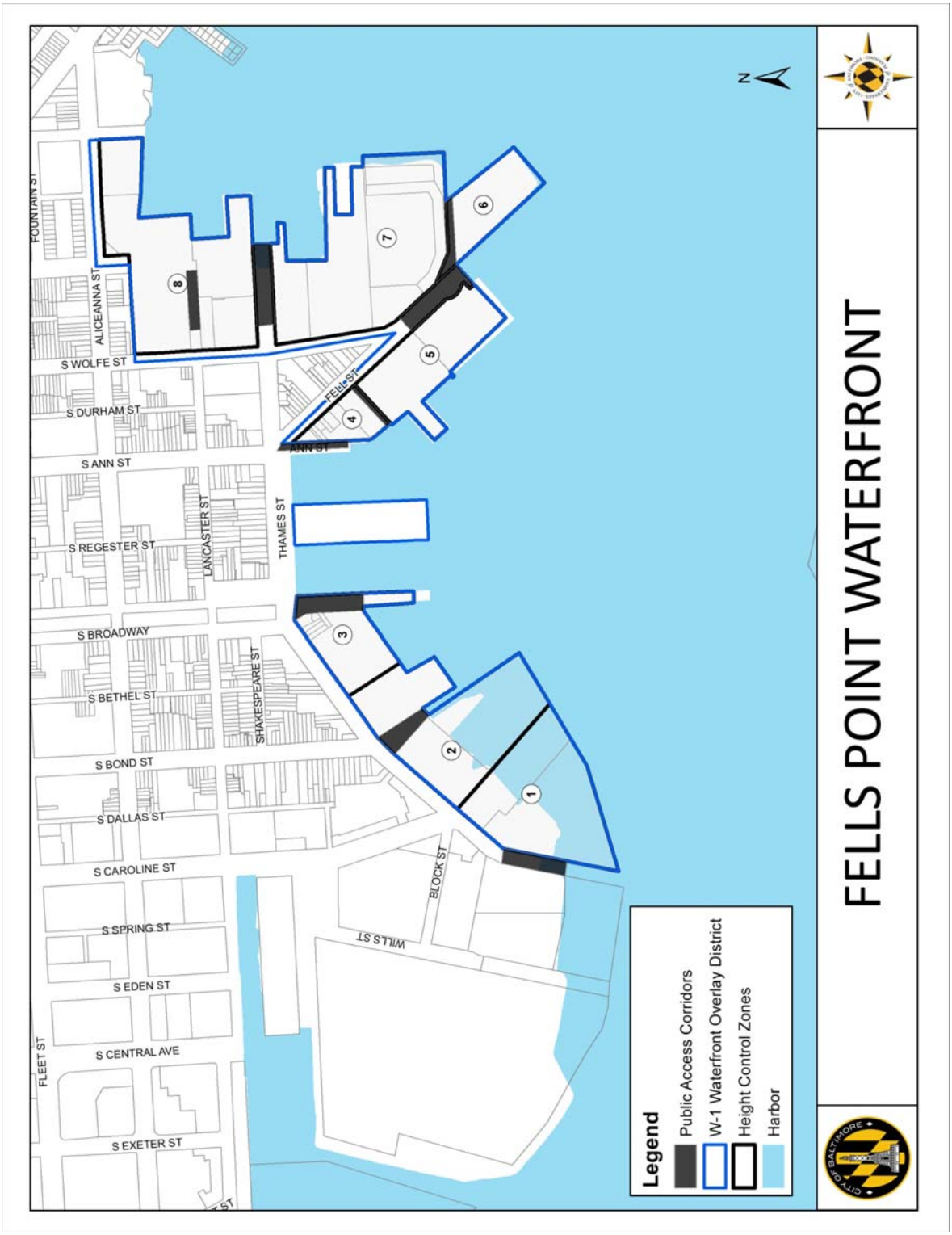

Height Limitations - The maximum building height shall be defined as the vertical distance measured, in the case of flat roofs, from the mean curb level of the highest point of the roof adjacent to the street wall, and in the case of pitched roofs, from the mean curb level to the mean height level of the roof. Where the walls of a building are not adjacent to a street curb, the height of a building shall be measured from the average elevation of the ground adjoining the walls.

AREA	HEIGHT LIMITATIONS
1	The maximum building heights shall be as set forth in the Constellation PUD.
2	The maximum building heights shall be as set forth in the Constellation PUD.
3	Thames Street elevations may be no higher than 40 feet. A building addition up to a maximum of 53 feet will be permitted if it is set back and designed so that it is not visible from the street frontage opposite this area.
4	Maximum building height may not exceed 40 feet.
5	Maximum building height may not exceed 60 feet, except on the property known as 1000 Fell Street where rehabilitation of the roof structure to accommodate a seventh story is permitted, provided that this seventh story is recessed so as not to be seen from the street frontage of the subject property, and a further exception is provided for the property known as 932-944 Fell Street (Belt's Wharf Condominium Property) for a building addition up to a maximum of 74 feet if recessed 40 feet from the street frontage of the property.
6	The average height of built area may be no more than 50 feet, with a maximum height of 60 feet. The maximum height along the water's edge is 40 feet. Additional height over 40 feet up to the maximum of 60 feet shall be constructed so that it is not visible from that portion of the promenade adjacent to the area or shall step up at an angle of no more than 45 degrees.
7	The average height of built area may be no more than 75 feet, with a maximum height of 90 feet. The maximum height along Wolfe Street and the water's edge is 40 feet. The maximum height along Thames Street is 60 feet. Additional height over the 40 feet and 60 feet up to the maximum of 90 feet shall be constructed so that it is not visible from that portion of the promenade adjacent to the area, Wolfe Street or Thames Street or shall step up at an angle of no more than 45 degrees.
8	The average height of built area shall be 45 feet, with a maximum height of 65 feet. The maximum height on Aliceanna Street, Chester Street and the water side shall be 40 feet for a minimum of 40 feet depth. The building shall be set back a minimum of 20 feet from the Chester Street right-of-way. Additions to the existing building at 705 S. Wolfe Street are permitted up to 65 feet. These additions shall be set back so as not to be seen from Wolfe Street, Aliceanna Street and the promenade adjacent to the area.

Public Access Corridors - In order to assure public access to the Pedestrian Promenade and to preserve and enhance views of the water, the following public access corridors shall be designated. The minimum width of the corridors shall be 50 feet. Landscaping, trees, lights, benches, tables, and other public amenities that will enhance, not impede, public view of the water shall be permitted. Off-street parking is not permitted within these corridors, except following review and approval of the Commissioner of the Department of Housing and Community Development. All access corridors should connect sidewalk and promenade and be physically and visually uninterrupted, and they must be accessible 24 hours daily. The general location of the following public access corridors are shown on the accompanying exhibit.

CORRIDOR	LOCATION
1	From a point at the approximated intersection of Thames, Philpot, and Caroline Streets extended south to the water.
2	From a point at the approximate intersection of Thames and existing Caroline Street southeast to the water.
3	From the eastern right-of-way of Bond and Thames Streets, 50 feet west to a point, southeast to the water's edge to a point, 100 feet east on the water's edge to the point of the existing right-of-way of Bond Street north to the intersection of Bond and Thames Streets.
4	From the end of Broadway south to the water.
5	From the end of Ann Street south to the water.
6	From a point approximately in front of 929 Fell Street southwest to the water.
7	From a point at the end of Fell Street east to the water along the property line between 1001 Fell Street and 935 S. Wolfe Street. The corridor shall extend 25 feet on either side of the property line.
8	From a point at the intersection of Washington Street extended and Thames Street south to the water.
9	From point at the approximate intersection of Fell and Wolfe Streets southeast to the water.
10	From the end of Thames Street east to the water.
11	From the end of Lancaster Street east to the water.
12	From a point at the approximate intersection of Aliceanna and Chester Streets south to the water.
13	The following public streets – Broadway, Ann, and Chester Streets – shall be designated as long view corridors. New obstructions, such as balconies, bridges or structures may be permitted only with prior approval of the Commissioner of the Department of Housing and Community Development.
14	From a point at the approximate intersection of the realigned Wills Street and Philpot Street south to the water.

(Ord. 16-581; Ord. 17-015.)

{PAGE LEFT INTENTIONALLY BLANK}

TABLE 12-903(3): KEY HIGHWAY WATERFRONT AREA

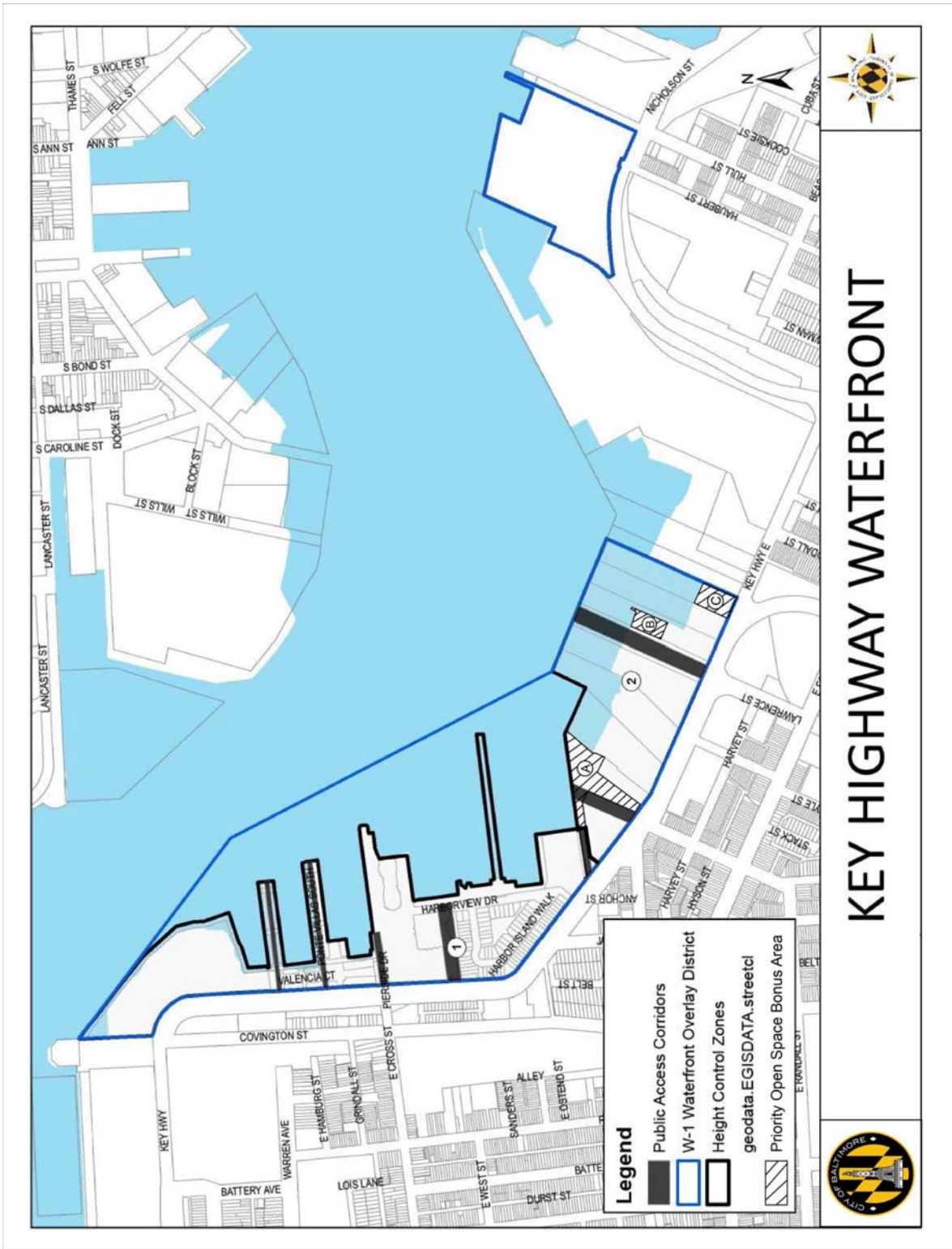

AREA	HEIGHT LIMITATIONS
1	Building height may not exceed 290 feet above Mean Low Tide. Building coverage in this area may not exceed the following percentages of the existing aggregate of those areas: (a) Grade to El. 58 feet: 65%. (b) El. 58 feet to El. 150 feet: 30%. (c) El. 150 feet to El. 390 feet: 16%. Maximum height of El. 58 feet in the area north of the eastward extension of Grindall Street and Key Highway. No structure located between El. 150 feet and El. 390 feet shall exceed 14,000 square feet in area nor be located less than 100 feet from any structure located between El. 150 feet and El. 390 feet. Rooftop mechanical equipment may exceed such a maximum permitted elevations, as approved by DHCD.
2	Minimum Building Height along Key Highway – 35 feet. Maximum Base Building Height – 60 feet. 15 foot stepback for building above 40 feet along Key Highway. All new buildings shall be setback a minimum of 18' from the existing curb line of Key Highway. Towers (building above 60 feet base building height) subject to the following**:** Maximum Floor-plates above 60 feet – 11,000 Gross Square Feet (GSF). Spaced no less than 100 feet from another tower. Maximum Total Building Height – 140 feet. Priority Open Space Bonus: additional height and density above 140 feet may be earned for the development of priority open space in Areas A, B, and C as labeled on the Table 12-903(3) Key Highway Waterfront Area, at a rate of 10 GSF building/ 1.0 GSF of priority open space provided. Only bonus density may be used above 140 feet. Maximum building height with bonuses may not exceed 290 feet. Priority Open Space created to calculate bonus density may not exceed 37,500 total square feet in Area A and may not exceed 28,000 total square feet in Areas B and C combined. Priority open space does not include the required Promenade and is to be built and maintained by the landowner for credit. Open spaces shall be established by public easements granted to the City.

AREA	PUBLIC-ACCESS AND PUBLIC-VIEW CORRIDORS
1	Public-Access Corridors must be provided from Key Highway to the water's edge from the five locations shown and connect the public sidewalk along Key Highway to the Public Promenade.
2	Public-Access Corridors must be a minimum of 20 feet in width of permanently constructed hard scape within a Public-View Corridor. The associated Public-View Corridor must be a minimum of 60 feet wide that connects the public sidewalk along Key Highway to the Public Promenade.

(Ord. 16-581; Ord. 17-015.)

TABLE 12-903(4): MIDDLE BRANCH WATERFRONT AREA

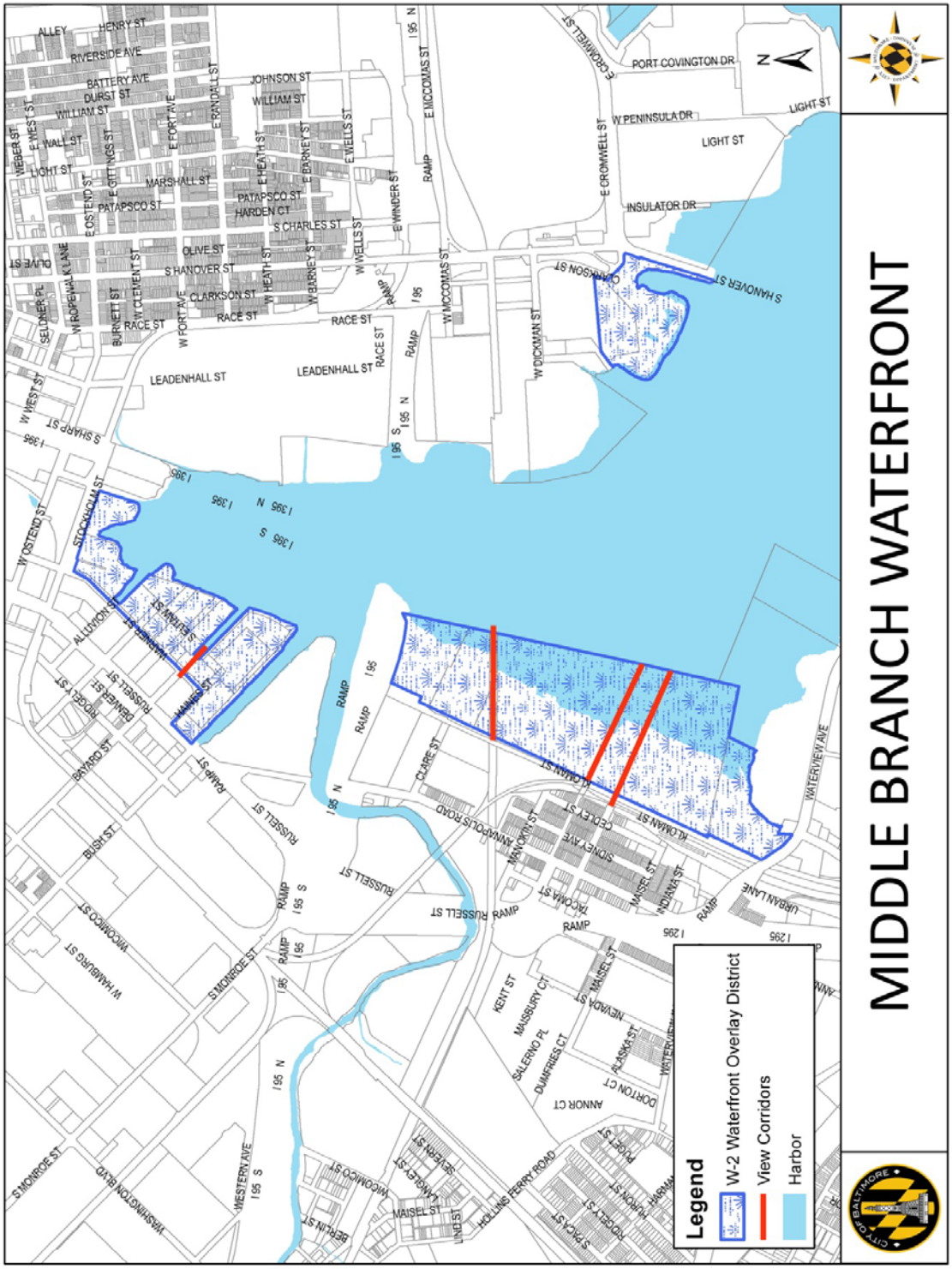

{TO BE DETERMINED}

(Ord. 16-581; Ord. 17-015.)

TABLE 12-1302: PORT COVINGTON DISTRICT – PERMITTED AND CONDITIONAL USES

USES	SUBDISTRICTS				USE STANDARDS
	PC-1	PC-2	PC-3	PC-4	
RESIDENTIAL					
Day-Care Home: Adult or Child	P	P	P		Per § 14-310
Dwelling (Above Non-Residential Ground Floor)	P	P	P		
Dwelling: Multi-Family	P	P	P		Per § 14-327
Dwelling: Rowhouse			P		
Dwelling: Live-Work	P	P	P		
Fraternity or Sorority House		P	P		
Residential-Care Facility (16 or Fewer Residents)	P	P	P		Per § 14-334
Residential-Care Facility (17 or More Residents)	P	CB	P		Per § 14-334
INSTITUTIONAL					
Community Center	P	P	P	P	
Cultural Facility	P	P	P	P	Per § 14-308
Educational Facility: Commercial-Vocational		P	P	P	
Educational Facility: Post-Secondary		P	P	P	
Educational Facility: Primary and Secondary		P	P	P	
Government Facility	P	P	P	P	
Homeless Shelter		CB	CB		
Hospital		P	P		
Place of Worship	P	P	P		Per § 14-332
OPEN-SPACE					
Community-Managed Open-Space Farm	P	P	P	P	Per § 14-307
Community-Managed Open-Space Garden	P	P	P	P	Per § 14-307
Fishing Pier	P	P	P	P	

Open-Space (cont'd)	*PC-1*	*PC-2*	*PC-3*	*PC-4*	
Forest and Nature Preserve	P	P	P	P	
Horse Stable	P	P	P		
Marina: Recreational	P [1]	P [1]	P [1]	P [1]	Per § 14-323
Park or Playground	P	P	P	P	
Recreational Boat Launch	P	P	P	P	
Urban Agriculture	P	P	P	P	Per § 14-339
Zoo	CB	CB	CB		
COMMERCIAL					
Animal Clinic		P	P		Per § 14-317
Art Gallery	P	P	P	P	
Arts Studio	P	P	P		
Arts Studio: Industrial	P	P	P		
Banquet Hall	P	P	P	P	Per § 14-302
Body Art Establishment	P	P	P	P	
Broadcasting Station (TV or Radio)	P	P	P	P	
Car Wash (Fully Enclosed Structure)		P	P	P	Per § 14-304
Car Wash (Outdoor)		CB	CB	P	Per § 14-304
Carry-Out Food Shop	P	P	P	P	
Check-Cashing Establishment	CB	CB	CB	CB	
Convention Center		P	P	P	
Country Club		P	P	P	
Day-Care Center: Adult or Child		P	P	P	Per § 14-309
Drive-Through Facility	P	P	P		Per § 14-311
Driving Range		P	P	P	
Entertainment: Indoor	P	P	P	P	Per § 14-312

Commercial (cont'd)	***PC-1***	***PC-2***	***PC-3***	***PC-4***	
Entertainment: Live	P	P	P	P	Per § 14-319
Fairground		P	P		
Financial Institution	P	P	P	P	
Funeral Home	P	P	P	P	
Gas Station		P	P		Per § 14-314
Greenhouse or Nursery	P	P	P	P	Per § 14-339
Health-Care Clinic		P	P	P	
Health Center		P	P	P	
Heavy Sales, Rental, or Service		CB	P		
Hotel or Motel	P	P	P	P	
Kennel		P	P		Per § 14-317
Lodge or Social Club	P	P	P	P	Per § 14-320
Motor Vehicle Dealership (Fully Enclosed Structure)		P	P		Per § 14-325
Motor Vehicle Dealership (Outdoor Vehicle Display)		P	P		Per § 14-325
Motor Vehicle Rental Establishment (Fully Enclosed Structure)		P	P	P	Per § 14-325
Motor Vehicle Rental Establishment (Outdoor Vehicle Display)		P	P		Per § 14-325
Motor Vehicle Service and Repair: Major		P	P		Per § 14-326
Motor Vehicle Service and Repair: Minor (Fully Enclosed Structure)		P	P	P	Per § 14-326
Motor Vehicle Service and Repair: Minor (Outdoor Vehicle Storage)		P	P		Per § 14-326
Nursery (*See* "Greenhouse or Nursery")	–	–	–	–	–
Office	P	P	P	P	
Outdoor Dining	P	P	P	P	Per § 14-329
Pawn Shop		CB	CB		

Commercial (cont'd	*PC-1*	*PC-2*	*PC-3*	*PC-4*	
Personal Services Establishment	P	P	P	P	
Racetrack		P	P		
Recreation: Indoor	P	P	P	P	Per § 14-312
Recreation: Outdoor	P	P	P	P	Per § 14-312
Recreational Vehicle Dealership			P		
Restaurant	P	P	P	P	
Retail Goods Establishment (No Alcoholic Beverages Sales)	P	P	P	P	
Retail Goods Establishment (With Alcoholic Beverages Sales)	P	P	P	P	Per § 14-336
Stadium	P	P	P	P	
Tavern	P	P	P	P	Per § 14-337
Video Lottery Facility		P	P		
INDUSTRIAL					
Alternative Energy System: Commercial	P	P	P	P	
Boat Manufacturing, Repair, and Sales					Per § 14-303
Commercial composting facility		CB	P		Per § 14-305
Food Processing: Light	P	P	P	P	
Contractor Storage Yard		CB	P		Per § 14-330
Freight Terminal		CB	P		
Heliport	P	P	P	P	
Helistop	P	P	P	P	
Industrial Boat Repair Facility		P	P		Per § 14-323
Industrial: General		P	P	P	Per § 14-315
Industrial: Light		P	P	P	
Industrial: Maritime-Dependent	P	P	P	P	
Marina: Dry Storage		P	P		Per § 14-323

Industrial (cont'd)	***PC-1***	***PC-2***	***PC-3***	***PC-4***	
Marine Terminal		CB	CB		
Materials Recovery Facility		CB	P		Per § 14-324
Mini-Warehouse		P	P		
Motor Vehicle Operations Facility		P	P		
Movie Studio		P	P		
Outdoor Storage Yard		CB	P	P	Per § 14-330
Passenger Terminal	P	P	P	P	
Printing Establishment		P	P		
Recyclable Materials Recovery Facility		CB	P		Per § 14-333
Research and Development Facility	P	P	P	P	
Resource Recovery Facility		CB	CB		Per § 14-335
Shipyard		P	P		
Truck Stop		CB	CB		
Truck Terminal		CB	CB		
Warehouse		P	P	P	
Waterfreight Terminal		CB	CB		
Wholesale Goods Establishment		P	P	P	
OTHER					
Alternative Energy System: Community-Based	P	P	P	P	Per § 14-306
Electric Substation: Enclosed, Indoor, or Outdoor	CB	CB	CB	CB	Per § 14-340
Parking Garage (Principal Use)		P	P	P	Per § 14-331
Parking Lot (Principal Use)		P	P	P	Per § 14-331
Telecommunications Facility [2]	CB, P	CB, P	CB, P	CB, P	Per § 14-338
Utilities	CB	CB	CB	CB	Per § 14-340
Wireless Communications Services [3]	CB, P	CB, P	CB, P	CB, P	Per § 14-338

[1] Subject to conformance with the Marina Master Plan.

[2] Only telecommunications base stations that comply with the stealth design standards of § 14-338 are considered permitted uses.

[3] Only Wireless Communication Services that are modifications to – and do not substantially change the physical dimension of – an existing telecommunications facility, are considered permitted uses.

(Ord. 16-581; Ord. 17-xxx.)

TABLE 12-1303: PORT COVINGTON DISTRICT – BULK AND YARD REGULATIONS

CATEGORIES	SPECIFICATIONS (PER SUBDISTRICT)			
	PC-1	**PC-2**	**PC-3**	**PC-4**
MINIMUM LOT AREA				
All Uses	None	None	None	None
MAXIMUM BUILDING HEIGHT				
All Uses	100 feet	None	200 feet	None
MINIMUM BUILDING HEIGHT				
All Uses	None	20 feet [1]	20 feet [1]	None
MINIMUM FRONT YARD				
All Uses	None	None	None	None
MINIMUM INTERIOR-SIDE YARD				
All Uses	None	None	None	None
MINIMUM CORNER-SIDE YARD				
All Uses	None	None	None	None
MAXIMUM REAR YARD				
All Uses	None	None	None	None

[1] However, a structure used for one or more of the following purposes has no minimum height requirement: open-space uses, alternative energy systems, utilities, or government facilities .

(Ord. 16-581; Ord. 17-015.)

{PAGE LEFT INTENTIONALLY BLANK}

TABLE 15-405: MOUNT VERNON NEIGHBORHOOD HEIGHT MAP

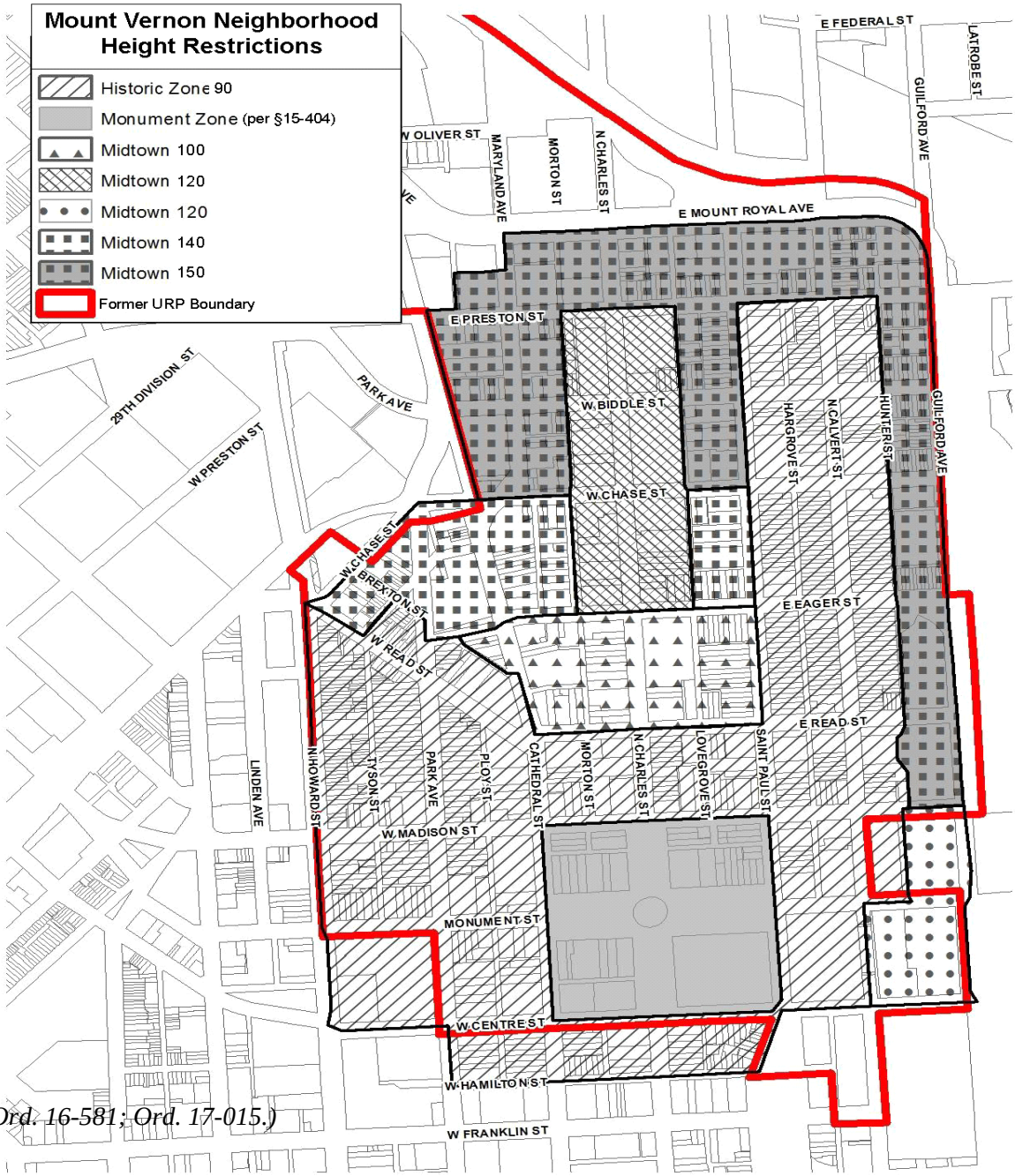

(Ord. 16-581; Ord. 17-015.)

{PAGE LEFT INTENTIONALLY BLANK}

TABLE 15-601: PERMITTED ENCROACHMENTS INTO REQUIRED YARDS

PERMITTED ENCROACHMENTS	FRONT YARD/ CORNER-SIDE YARD	INTERIOR-SIDE YARD	REAR YARD
Accessability ramp	x	x	x
Alternative energy system, solar, ground-mounted – As in § 15-517	x	x	x
Alternative energy system, wind – As in § 15-518			x
Amateur (ham) radio equipment (§ 15-202) – Not incl. tower	x	x	x
Amateur (ham) radio equipment (§ 15-202) – Tower			x
Arbor or trellis – Attached to principal structure	x	x	x
Arbor or trellis – Freestanding			x
Awning, sun shade, or canopy extending from a window, porch, or door – No more than 3' into a required yard	x	x	x
Balcony – At least 5' from front lot line or corner-side lot line	x		x
Chimney – No more than 2' into a required yard	x	x	x
Compost pile – Must be (i) within a bin (no open air composting); and (ii) at least 3' from any lot line			x
Cornice, eave, belt course, sill, 1-story bay window, or similar architectural feature – No more than 2' into a required yard	x	x	x
Deck			x
Exterior stairwell – No more than 4' into a required yard			x
Fence or wall (Front or corner-side yard) – No more than 3.5' high	x		
Fence or wall (Rear or interior-side yard) – No more than 6' high		x	x
Fire escape	x Corner-side yard only	x	x
Fireplace			x
Flagpole	x	x	x
Garage (Residential, detached) (§ 15-511)			x
Greenhouse or hoop-house (§ 15-506)			x
Laundry-drying equipment			x

PERMITTED ENCROACHMENTS	*FRONT YARD/ CORNER-SIDE YARD*	*INTERIOR-SIDE YARD*	*REAR YARD*
Lawn furniture (benches, bird baths, sundials, etc.)	x	x	x
Lighting, exterior	x	x	x
Mechanical equipment (§ 15-508)	x	x	x
Patio or terrace, open	x	x	x
Playground equipment and playhouses	x Corner-side yard only	x	x
Porch (§ 15-512), unenclosed, with or without roof – No more than 1 story high; No more than 8' into a required yard.	x	x	x
Rain barrel or above-ground cistern	x	x	x
Recycling collection station (§ 15-514)			x
Refuse disposal container or storage area (§ 15-515)		x	x
Satellite dish antenna (§ 15-516) – 1 meter or less in diameter	x	x	x
Satellite dish antenna (§ 15-516) – More than 1 meter in diameter		x Non-res'l districts only	x
Shed, tool house, or similar storage structure	x	x	x
Steps, open	x	x	x
Stormwater management facilities	x	x	x
Swimming pool			x
Tennis court			x
Terrace (*See* "Patio or terrace")	–	–	–
Tool house (*See* "Shed...")	–	–	–
Walls (*See* "Fence or wall")	–	–	–

(Ord. 16-581; Ord. 17-015.)

TABLE 16-402: OFF-STREET PARKING DIMENSIONS

PARKING ANGLE x°	MINIMUM DIMENSIONS						
	Stall Width (a)	**Stall Depth (b)**	**Skew Width (c)**	**Aisle Width *(Two-Way)* (d)**	**Aisle Width *(One-Way)* (e)**	**Overall Module (f)**	**Wheel Stop (g)**
0° (Parallel)	9 feet	18 feet	9 feet	22 feet	11 feet	41 feet	—
90° (Head-In)	9 feet	18 feet	9 feet	22 feet	20 feet	58 feet	—
60°	9 feet	21 feet	9.8 feet	—	18 feet	60 feet	55.75 feet
45°	9 feet	19.8 feet	12 feet	—	12.5 feet	52 feet	46 feet

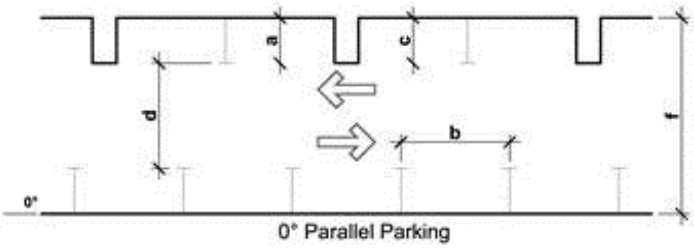

0° Parallel Parking

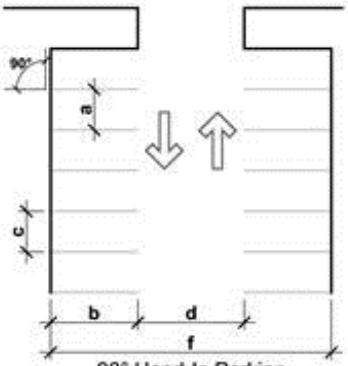

90° Head-In Parking

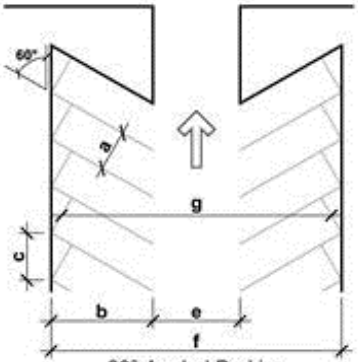

60° Angled Parking

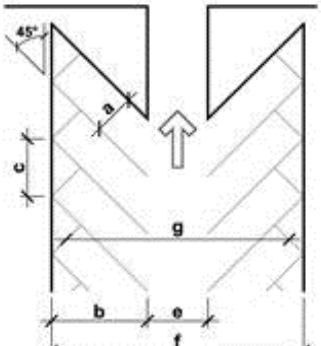

45° Angled Parking

{PAGE LEFT INTENTIONALLY BLANK}

TABLE 16-406: REQUIRED OFF-STREET PARKING

USES	PARKING SPACES REQUIRED
Adult Use	3 per 1,000 sq. ft. of GFA
Alternative Energy System	2 per 1,000 sq. ft. of office area
Animal Clinic	1 per examination room
Art Gallery	1 per 1,000 sq. ft. of GFA
Arts Studio	1 per 2,000 sq. ft. of studio area
Arts Studio: Industrial	1 per 2,000 sq. ft. of studio area
Bail Bond Establishment	2 per 1,000 sq. ft. of GFA
Banquet Hall	1 per 10 persons of fire-rated capacity
Boat Manufacturing, Repair, and Sales	1 per 4 employees on peak shift + 1 per company vehicle maintained on the premises
Body Art Establishment	1 per 1,000 sq. ft. of GFA
Broadcasting Station (Tv or Radio)	1 per 2 employees on peak shift + 1 per company vehicle maintained on the premises
Carry-Out Food Shop	2 per 1,000 sq. ft. of GFA + 3 stacking spaces per drive-through lane
Car Wash	2 per service bay
Cemetery	2 per 1,000 sq. ft. of office area + 1 per 4 persons of fire-rated capacity in chapel
Check-cashing Establishment	2 per 1,000 sq. ft. of GFA
Commercial composting facility	1 per employee on peak shift
Community Center	1 per 10 persons of fire-rated capacity
Contractor Storage Yard	2 per 1,000 sq. ft. of office and public-use areas
Convention Center	1 per 10 persons of fire-rated capacity
Country Club	Cumulative of various uses within the development (golf course, restaurant, etc.)
Cultural Facility	1 per 4,000 sq. ft. of GFA
Day-Care Center: Adult or Child	1 per 4 employees on peak shift
Driving Range	1.5 per tee stand

Dwelling: All unless otherwise specified	1 per dwelling unit
Dwelling: Live-Work	1 per dwelling unit
Dwelling: Multi-Family – Age-Restricted Housing	1 per 2 dwelling units
Educational Facility: Commercial-Vocational	1 per 4 employees on peak shift + 1 per 25 students, based on maximum student capacity + 1 per facility vehicle if outdoor component (e.g., driving track) is present
Educational Facility: Post-Secondary	1 per 4 employees on peak shift + 1 per 25 students based on the maximum student capacity
Educational Facility: Primary and Secondary	1 per 4 employees on peak shift + 1 per 50 students, based on maximum student capacity
Entertainment: Indoor – Generally	1 per 10 persons of fire-rated capacity
Entertainment: Indoor – Movie Theater	1 per 4 seats for first 400 seats + 1 per 6 seats after first 400
Entertainment: Live (Principal Use)	1 per 10 persons of fire-rated capacity
Financial Institution	2 per 1,000 sq. ft. of GFA + 2 stacking spaces per drive-through lane
Food Processing: Light	Lesser of (i) 1 per 4 employees on peak shift, or (ii) 1 per 1,000 sq. ft. of GFA
Fraternity or Sorority House	1 per 2 rooming units
Freight Terminal	3 per 20,000 sq. ft. of warehousing area + 3 per 1,000 sq. ft. of office area
Funeral Home	2 per 1,000 sq. ft. of office area + 1 per 4 persons of fire-rated capacity in chapel + 1 per company vehicle maintained on the premises
Gas Station	2 per 1,000 sq. ft. of accessory retail area
Golf Course	3 per hole
Government Facility	1 per 1,000 sq. ft. of office and public-use areas + 1 per government vehicle maintained on the premises
Greenhouse or Nursery	2 per 1,000 sq. ft. of GFA (including outdoor sales or display area)
Health-Care Clinic	3 per 1,000 sq. ft. of GFA
Health Center	2 per 1,000 sq. ft. of public use area
Heavy Sales, Rental, or Service	Lesser of (i) 1 per 4 employees on peak shift, or (ii) 1 per 1,000 sq. ft. of GFA
Horse Stable	1 per 5 stalls
Hospital	1 per 10 hospital beds + 1 per 4 employees (including staff doctors) on peak shift + 1 per 2 examination rooms in medical offices

Hotel or Motel	1 per 4 rooms
Industrial Boat Repair Facility	Lesser of (i) 1 per 4 employees on peak shift, or (ii) 1 per 1,000 sq. ft. of GFA
Industrial: General	Lesser of (i) 1 per 4 employees on peak shift, or (ii) 1 per 1,000 sq. ft. of GFA
Industrial: Light	Lesser of (i) 1 per 4 employees on peak shift, or (ii) 1 per 1,000 sq. ft. of GFA
Industrial: Maritime-Dependent	Lesser of (i) 1 per 4 employees on peak shift, or (ii) 1 per 1,000 sq. ft. of GFA
Kennel	2 per 1,000 sq. ft. of public waiting area
Landfill: Industrial	Lesser of (i) 1 per 4 employees on peak shift, or (ii) 1 per 1,000 sq. ft. of office area
Lodge or social club	1 per 10 persons of fire-rated capacity
Marina: Dry Storage	1 per 4 slips (Note: During the off-season, September 15 to May 14, the parking area may be used for the storage of boats, trailers, or other related materials, as long as at least 10% of required parking remains)
Marina: Recreational	1 per 2 slips
Marine Terminal	Lesser of (i) 1 per 4 employees on peak shift, or (ii) 1 per 1,000 sq. ft. of GFA
Materials Recovery Facility	Lesser of (i) 1 per 4 employees on peak shift, or (ii) 1 per 1,000 sq. ft. of office area
Mini-Warehouse	1 per 50 storage units
Motor Vehicle Dealership	1 per 1,000 sq. ft. of GFA
Motor Vehicle Operations Facility	Lesser of (i) 1 per 4 employees on peak shift, or (ii) 1 per 1,000 sq. ft. of office area
Motor Vehicle Rental Establishment	2 per 1,000 sq. ft. of office and public-use areas + 1 per company vehicle maintained on the premises
Motor Vehicle Service and Repair, Major or Minor	2 per service bay
Movie Studio	Lesser of (i) 1 per 4 employees on peak shift, or (ii) 1 per 1,000 sq. ft. of office area
Nursery (*See* "Greenhouse or Nursery")	
Office	1 per 800 sq. ft. of GFA
Outdoor Storage Yard	1 per 1,000 sq. ft. of office and public-use areas
Passenger Terminal	3 per 1,000 sq. ft. of GFA
Pawn Shop	2 per 1,000 sq. ft. of GFA
Personal Services Establishment	2 per 1,000 sq. ft. of GFA
Place of Worship	1 per 4 persons of fire-rated capacity; or, for places of worship whose worshipers are required to walk to worship because of religious tenet, 1 per 8 persons of fire-rated capacity + 1 or more additional spaces as required by this Code for other uses on the site

Printing Establishment	Lesser of (i) 1 per 4 employees on peak shift, or (ii) 1 per 1,000 sq. ft. of GFA
Racetrack	1 per 10 persons of fire-rated capacity
Recreation: Indoor	1 per 2,000 sq. ft. of GFA
Recreation: Outdoor	2 per 1,000 sq. ft. of public-use area (not including actual playing field or pool)
Recreational Vehicle Dealership	1 per 1,000 sq. ft. of GFA
Recyclable Materials Recovery Facility	Lesser of (i) 1 per 4 employees on peak shift, or (ii) 1 per 1,000 sq. ft. of office area
Recycling and Refuse Collection Facility	Lesser of (i) 1 per 4 employees on peak shift, or (ii) 1 per 1,000 sq. ft. of office area
Research and Development Facility	Lesser of (i) 1 per 4 employees on peak shift, or (ii) 1 per 1,000 sq. ft. of GFA
Residential-Care Facility	1 per 4 employees on peak shift + 1 per 6 residents; however, if the facility does not permit residents to have vehicles at the facility, the facility need not provide off-street parking spaces for residents
Resource Recovery Facility	Lesser of (i) 1 per 4 employees on peak shift, or (ii) 1 per 1,000 sq. ft. of office area
Restaurant	1 per 1,000 sq. ft. of indoor public seating area + 3 stacking spaces per drive-through lane
Retail: Big Box Establishment	2 per 1,000 sq. ft. of GFA
Retail Goods Establishment	2 per 1,000 sq. ft. of GFA
Rooming House	1 per 2 rooming units
Shipyard	Lesser of (i) 1 per 4 employees on peak shift, or (ii) 1 per 1,000 sq. ft. of GFA
Stadium	1 per 10 persons of fire-rated capacity
Tavern	1 per 1,000 sq. ft. of indoor public seating area
Truck Repair	2 truck-sized parking spaces per service bay + 1 per 4 employees on peak shift
Truck Stop	1 truck-sized space per 5,000 sq. ft. of site area + 1 per 4 employees on peak shift
Truck Terminal	Lesser of (i) 1 per 4 employees on peak shift, or (ii) 1 truck-sized space per 5,000 sq. ft. of site area
Urban Agriculture	1 per company vehicle maintained on the premises
Video Lottery Facility	1 per 10 persons of fire-rated capacity
Warehouse	1 per 20,000 sq. ft. of warehousing area + 3 per 1,000 sq. ft. of office area
Waterfreight Terminal	Lesser of (i) 1 per 4 employees on peak shift, or (ii) 1 per 1,000 sq. ft. of GFA
Wholesale Goods Establishment	Lesser of (i) 1 per 4 employees on peak shift, or (ii) 1 per 1,000 sq. ft. of GFA

(Ord. 16-581; Ord. 17-015.)

TABLE 16-501: COLLECTIVE PARKING CALCULATION						
LAND USE	**WEEKDAYS**			**WEEKENDS**		
	Mid – 7am	**7am – 6pm**	**6pm – Mid**	**Mid – 7am**	**7am – 6pm**	**6pm – Mid**
RESIDENTIAL	100%	55%	85%	100%	65%	75%
COMMERCIAL						
Hotel or Motel	100%	50%	90%	100%	65%	80%
Movie Theater	0%	70%	100%	5%	70%	100%
Office	5%	100%	5%	0%	40%	10%
Restaurant	50%	70%	100%	45%	70%	100%
All Other Comm'l	0%	100%	80%	0%	100%	60%
INDUSTRIAL	5%	100%	5%	0%	60%	10%

(Ord. 16-581; Ord. 17-015.)

{PAGE LEFT INTENTIONALLY BLANK}

TABLE 16-705: REQUIRED BICYCLE SPACES

***CAUTION:** THE REQUIREMENTS OF THIS TABLE ARE SUBJECT TO VARIOUS STATUTORY QUALIFICATIONS, EXEMPTIONS, STANDARDS, MINIMUM REQUIREMENTS, AND ADJUSTMENTS. FOR SPECIFICS, CONSULT § 16-705 OF THIS CODE.*

USES	LONG-TERM SPACES REQ'D	SHORT-TERM SPACES REQ'D
Art Gallery	1 per 10,000 sq. ft. of GFA	1 per 5,000 sq. ft. of GFA
Arts Studio	1 per 10,000 sq. ft. of GFA	1 per 5,000 sq. ft. of GFA
Banquet Hall	1 per 200 persons of fire-rated capacity	None
Cemetery	1 per 10,000 sq. ft. of office and chapel areas	1 per 7,500 sq. ft. of office and chapel areas
Convention Center	1 per 20,000 sq. ft. of GFA	1 per 40,000 sq. ft. of GFA
Cultural Facility	1 per 10,000 sq. ft. of GFA	1 per 10,000 sq. ft. of GFA
Day-Care Center: Adult or Child	1 per 10,000 sq. ft. of GFA	None
Dwelling: Multi-Family – Generally	1 per 4 dwelling units	1 per 12 dwelling units
Dwelling: Multi-Family – Age-Restricted Housing	75% of general multi-family requirement	75% of general multi-family req't
Educational Facility: Commercial-Vocational or Post-Secondary	1 per 20 employees on peak shift + 1 per 25 students based on maximum student capacity	None
Educational Facility: Primary and Secondary	1 per 20 employees on peak shift + 1 per 50 students based on maximum student capacity	None
Entertainment: Indoor – Generally	1 per 150 persons of fire-rated capacity	None
Entertainment: Indoor – Movie Theater	1 per 10,000 sq. ft. of GFA	1 per 5,000 sq. ft. of GFA
Entertainment: Outdoor	1 per 15,000 sq. ft. of public-use area	1 per 5,000 sq. ft. of public-use area
Financial Institution	1 per 10,000 sq. ft. of GFA	1 per 25,000 sq. ft. of GFA
Government Facility	1 per 8,000 sq. ft. of GFA	1 per 15,000 sq. ft. of GFA
Health-Care Clinic	1 per 50,000 sq. ft. of GFA	1 per 30,000 sq. ft. of GFA
Hospital	1 per 50,000 sq. ft. of GFA	1 per 30,000 sq. ft. of GFA

USES	*LONG-TERM SPACES*	*SHORT-TERM SPACES*
Hotel or Motel	1 per 8 guest units	None
Industrial: General	1 per 30,000 sq. ft. of GFA	None
Office	1 per 10,000 sq. ft. of GFA	1 per 25,000 sq. ft. of GFA
Park or Playground	None	None
Parking Garage or Lot (Principal Use)	1 per 20 vehicle parking spaces	None
Passenger Terminal	None	None
Personal Services Establishment	1 per 10,000 sq. ft. of GFA	1 per 5,000 sq. ft. of GFA
Place of Worship	1 per 15,000 sq. ft. of GFA	1 per 7,500 sq. ft. of GFA
Recreation: Indoor	1 per 150 persons of fire-rated capacity	None
Recreation: Outdoor	1 per 15,000 sq. ft. of public-use area	1 per 5,000 sq. ft. of public-use area
Residential-Care Facility	1 per 8 residents; however, if the facility does not permit residents to have bicycles at the facility, the facility need not provide bicycle parking spaces for them	1 per 16 residents; however, if the facility does not permit residents to have bicycles at the facility, the facility need not provide bicycle parking spaces for them
Restaurant	1 per 4,000 sq. ft. of GFA	1 per 4,000 sq. ft. of GFA
Retail Goods Establishment	1 per 10,000 sq. ft. of GFA	1 per 5,000 sq. ft. of GFA
Stadium	1 per 200 seats	None
Tavern	1 per 4,000 sq. ft. of GFA	1 per 4,000 sq. ft. of GFA

(Ord. 16-581; Ord. 17-015.)

TABLE 16-902: OFF-STREET LOADING REQUIREMENTS	
USES	**LOADING SPACES REQUIRED**
COMMERCIAL AND INSTITUTIONAL USES	
20,000 – 100,000 sq. ft. of GFA	1 loading space
Over 100,000 sq. ft. of GFA	2 loading spaces
INDUSTRIAL USES	
5,000 – 10,000 sq. ft. of GFA	1 loading space
10,001 – 40,000 sq. ft. of GFA	2 loading spaces
40,001 – 100,000 sq. ft. of GFA	3 loading spaces
Plus, for each additional 100,000 sq. ft. of GFA	1 additional loading space

(Ord. 16-581; Ord. 17-015.)

{PAGE LEFT INTENTIONALLY BLANK}

TABLE 17-804: FREESTANDING SIGN REGULATIONS

DISTRICTS	MONUMENT SIGN		POLE SIGN	
	MAXIMUM AREA	MAXIMUM HEIGHT	MAXIMUM AREA	MAXIMUM HEIGHT
RESIDENTIAL				
R-1A through R-10	32 sq. ft.	6'	Prohibited	Prohibited
COMMERCIAL				
C-1	32 sq. ft.	6'	Prohibited	Prohibited
C-1-E	32 sq. ft.	6'	Prohibited	Prohibited
C-1-VC	32 sq. ft.	6'	Prohibited	Prohibited
C-2	32 sq. ft.	6'	14 sq. ft.	16'
C-3	50 sq. ft.	8'	32 sq. ft.	20'
C-4	50 sq. ft.	8'	32 sq. ft.	20'
C-5	50 sq. ft.	8'	Prohibited	Prohibited
INDUSTRIAL				
OIC	50 sq. ft.	8'	50 sq. ft.	24'
BSC	50 sq. ft.	8'	50 sq. ft.	24'
I-MU	50 sq. ft.	8'	50 sq. ft.	24'
I-1 and I-2	50 sq. ft.	8'	50 sq. ft.	24'
MI	50 sq. ft.	8'	50 sq. ft.	24'
SPECIAL PURPOSE				
OR	32 sq. ft.	6'	Prohibited	Prohibited
EC-1 and EC-2	50 sq. ft.	8'	32 sq. ft.	20'
H	50 sq. ft.	8'	32 sq. ft.	20'
TOD-1, -2, -3, and -4	32 sq. ft.	6'	Prohibited	Prohibited
OPEN SPACE AND ENVIRONMENTAL				
OS: *See* § 17-809 {"Open-Space directional signs"}and § 17-810 {"Open-Space identification signs"}				

(Ord. 16-581; Ord. 17-015.)

{PAGE LEFT INTENTIONALLY BLANK}

TABLE 17-812: PROJECTING SIGN REGULATIONS		
DISTRICTS	**MAXIMUM SIGN AREA**	
	GROUND FLOOR	**2ND FLOOR**
RESIDENTIAL		
R-1A through R-10	Prohibited	Prohibited
COMMERCIAL		
C-1	12 sq. ft.	6 sq. ft.
C-1-E	12 sq. ft.	6 sq. ft.
C-1-VC	12 sq. ft.	6 sq. ft.
C-2	16 sq. ft.	8 sq. ft.
C-3	24 sq. ft.	12 sq. ft.
C-4	24 sq. ft.	12 sq. ft.
C-5	36 sq. ft.	12 sq. ft.
INDUSTRIAL		
OIC	48 sq. ft.	Prohibited
BSC	48 sq. ft.	Prohibited
I-MU	48 sq. ft.	Prohibited
I-1 and I-2	48 sq. ft.	Prohibited
MI	48 sq. ft.	Prohibited
SPECIAL PURPOSE		
OR	Prohibited	Prohibited
EC-1	Prohibited	Prohibited
EC-2	36 sq. ft.	12 sq. ft.
H	36 sq. ft.	12 sq. ft.
TOD-1, -2, -3, and -4	16 sq. ft.	8 sq. ft.
OPEN SPACE AND ENVIRONMENTAL		
OS: *See* § 17-809 {"Open-Space directional signs"} & § 17-810 {"Open-Space identification signs"}		

(Ord. 16-581; Ord. 17-015.)

{PAGE LEFT INTENTIONALLY BLANK}

UNCODIFIED DIRECTIVES

Legalization of Code Article 32 ***{Ord. 17-015, Sec. 1}***

City Code Article 32 {"Zoning"}, as enacted by Ordinance 16-581 and as edited, codified, and, on March 15, 2017, published by the Baltimore City Department of Legislative Reference, is legalized. That Article, as further amended by this Ordinance, is and may be taken by all public officials and others as evidence of all general zoning ordinances of the Mayor and City Council in effect as of the effective date of this Ordinance.

Enactment of Zoning Map ***{Ord. 16-581, Sec. 3, as amended by Ord. 17-015, Sec. 2}***

*[T]*he Zoning Map dated October 24, 2016, and accompanying *[Ordinance 16-581]*, as that map was signed and approved by the Mayor and co-signed by the President of the City Council, both under date of December 5, 2016, is enacted as a part of new City Code Article 32 - Zoning.

Renumbering or Relettering Statutory Units ***{Ord. 17-015, Sec. 4}***

*[I]*f a section, subsection, paragraph, subparagraph, tabulated item or subitem, or other statutory unit is added to or repealed from City Code Article 32 {"Zoning"} by this or any subsequent Ordinance, the Department of Legislative Reference, in codifying the amendatory Ordinance, is authorized to renumber or reletter related statutory units as appropriate to reflect the added or repealed unit and is further authorized to conform cross-references to the renumbered or relettered statutory units.

Statutory Catchlines Not Law ***{Ord. 16-581, Sec. 4(2nd), and Ord. 17-015, Sec. 6}***

*[T]*he catchlines contained in this Ordinance are not law and may not be considered to have been enacted as a part of this or any prior Ordinance.